Journal of Personality and Social Psychology
2008, Vol. 94, No. 4, 647–671

Copyright 2008 by the American Psychological Association
0022-3514/08/$12.00 DOI: 10.1037/0022-3514.94.4.647

How the Head Liberates the Heart: Projection of Communal Responsiveness Guides Relationship Promotion

Edward P. Lemay, Jr., and Margaret S. Clark
Yale University

In 5 studies, the authors tested predictions that (a) people project their own felt communal responsiveness onto partners, perceiving partners to be just as caring and supportive as they are, and (b) projected perceptions guide perceivers' orientation toward further promotion of communal relationships. In Study 1, a manipulation of felt communal responsiveness toward a partner affected perceptions of the partner's responsiveness to the self, which in turn predicted evaluation of the partner. In Study 2, a manipulation of responsiveness toward a new acquaintance biased perceptions of the acquaintance's responsiveness to the self, which in turn predicted attraction and warmth toward the new acquaintance. In Studies 3 and 5, participants' own felt communal responsiveness toward a friend appeared to bias their perceptions of the friend's communal responsiveness, which in turn predicted self-disclosure, evaluation of the friend (Studies 3 and 5), and support provision (Study 5). Initial projected perceptions of a friend's (Study 3) and of a spouse's (Study 4) communal responsiveness also predicted longitudinal changes in perceivers' communal responsiveness. Results suggest that those who care for partners often project that care and that this projection guides their relationship promotion.

Keywords: projection of responsiveness, assumed similarity, social support, communal relationships, self-disclosure

This document is copyrighted by the American Psychological Association or one of its allied publishers.
This article is intended solely for the personal use of the individual user and is not to be disseminated broadly.

Perceiving that a partner responds supportively to one's needs is thought to be a critical determinant of the development of intimate relationships (Reis, Clark, & Holmes, 2004). This perception enhances happiness and satisfaction within the relationship and contributes to the fulfillment of our need to belong in *communal relationships*—those relationships characterized by a mutual bond of caring for needs (Baumeister & Leary, 1995; Clark & Mills, 1993). Moreover, perceiving a partner as responsive to one's needs appears to motivate people to approach and invest in relationships and to prevent pernicious defensive responses to doubts about a partner's acceptance and care (Murray, Holmes, & Collins, 2006).

In the current research, we test a model positing that perceptions of a partner's responsiveness to one's needs are, in part, projections of one's own responsiveness to a partner's needs. That is, people tend to assume that their own felt care for a partner is reciprocated by that partner. In turn, we posit that projected perceptions of a partner's responsiveness are functional for those who care for partners, helping them feel the confidence and motivation necessary to promote a communal bond with the partner. A model guiding the present research is presented in Figure 1. Perceptions of a partner's responsiveness are thought to be driven, in large part, by one's own responsiveness to a partner (Path A) and, to a lesser degree, by the partner's actual felt responsiveness (Path B). In turn, subjective perceptions of a partner's responsiveness should predict a class of outcomes reflecting an orientation toward promoting a communal bond (Path C), and projection of responsiveness should explain partially why people who claim to care for partners are oriented toward promoting that bond (Path D). In the remainder of this introduction, we further describe this model and the research and theorizing that inspired it.

Projection of Communal Responsiveness

As a relatively stable construct, perceived partner responsiveness is thought to involve generalized beliefs about the partner's concern for one's welfare and supportive responses to one's needs in past interactions, as well as expectations for the partner's concern and communal motivation toward the self in the future. Perceived partner responsiveness also appears to have a state-like component, such that perceiving a partner as behaviorally responsive to or motivated to care for one's needs varies from one interaction to the next (Laurenceau, Barrett, & Pietromonaco, 1998).

How are these perceptions formed? The obvious answer is that perceived partner responsiveness reflects the partner's actual responsiveness. Indeed, perceived social support, a construct that overlaps considerably with perceived partner responsiveness to

Edward P. Lemay, Jr., and Margaret S. Clark, Department of Psychology, Yale University

Margaret S. Clark's participation in the project and data collection for Study 4 were supported by National Science Foundation Grant BNS 9983417. Edward P. Lemay, Jr.'s participation in the project and data collection for the other studies were supported by a National Institute of Mental Health National Research Service Award predoctoral fellowship. The opinions and conclusions expressed in the article are those of the authors and do not necessarily reflect the opinions of the National Science Foundation or of the National Institutes of Health. We thank Virginia Fraser, Patricia Jenkins, and Sherri Pataki for assistance with collecting data for Study 4; Colin Adamo, Elizabeth Cronson, and Lisa Shull for coding data for Study 2; and Dave Kenny for advice regarding statistical analysis of data from Study 5.

Correspondence concerning this article should be addressed to Edward P. Lemay, Jr. or Margaret S. Clark, Department of Psychology, Yale University, Box 208205, New Haven, CT 06520-8205. E-mail: edward.lemay@yale.edu or margaret.clark@yale.edu

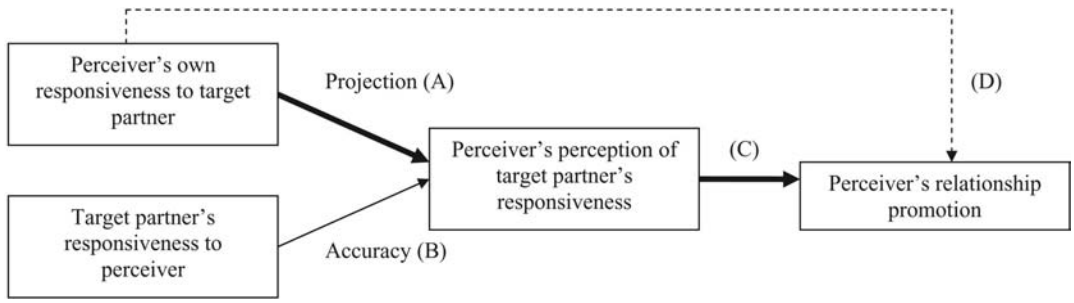

Figure 1. Model of projection of responsiveness guiding relationship promotion.

This document is copyrighted by the American Psychological Association or one of its allied publishers.
This article is intended solely for the personal use of the individual user and is not to be disseminated broadly.

needs, does appear to contain a kernel of truth. When a person claims to be generally supportive to a partner, the partner also tends to claim that the person is generally supportive (Abbey, Andrews, & Halman, 1995; Bolger, Zuckerman, & Kessler, 2000; Vinokur, Schul, & Caplan, 1987). Likewise, perceptions of a partner's supportiveness in specific interactions are predicted by observers' ratings of that partner's supportiveness (Collins & Feeney, 2000; Cutrona, Hessling, & Suhr, 1997). Research in related areas, including perceived regard and perceived willingness to sacrifice for relationships, suggests a similar kernel of truth in perceptions of partner responsiveness (Murray, Holmes, & Griffin, 2000; Van Lange et al., 1997). In addition, our own prior research has produced evidence for a kernel of truth with measures of responsiveness to needs; those who claimed to be motivated to respond to their partners' needs had partners who agreed that they were motivated (Lemay, Clark, & Feeney, 2007). However, these effects tend to be moderate to weak, suggesting an additional, perhaps large, subjectively constructed component (cf. Reis et al., 2004).

Prior research examining this subjective component has emphasized individual differences. Those who are depressed, who have low self-esteem, or who are insecurely attached, for instance, tend to think that partners do not accept or care for them (Collins & Feeney, 2004; Lakey & Cassady, 1990; Murray et al., 2006; Vinokur et al., 1987). Although individual differences undoubtedly affect perceptions of others' responsiveness, an individual-difference perspective cannot easily explain findings that perceived support largely appears to be a *relationship* phenomenon, with most variability in perceptions occurring between relationships (Barry, Lakey, & Orehek, 2007; Cook, 2000; Lakey, McCabe, Fisicaro, & Drew, 1996).

We (Lemay et al., 2007) have posited another bias in perceiving partners' responsiveness, one that is compatible with the idea that security in a partner's responsiveness varies from one relationship to the next. Specifically, people may project their own responsiveness toward a particular partner onto their perceptions of that partner's responsiveness to the self. In other words, when one cares for a partner and desires a communal relationship with a partner, he or she perceives that the partner harbors similar sentiments. This perspective builds on research suggesting that people are rather egocentric perceivers, overusing self-related information when making social judgments. The tendency to presume that others are similar to the self, or to project the self onto others (cf. D. S. Holmes, 1968), is a robust egocentric social-judgment process (Krueger & Clement, 1994), even when judging close partners (Kenny & Acitelli, 2001; Murray, Holmes, & Griffin, 1996a). People think that partners are more similar to the self than is warranted by partners' reports.

When inferring others' sentiments, people may first start with their own perspective and then make (often insufficient) adjustments until a plausible conclusion is reached (Epley, Keysar, Van Boven, & Gilovich, 2004). As those who claim to be responsive to partners expect and desire for their partners to be responsive in return (Clark & Mills, 1993; J. G. Holmes & Rempel, 1989), the conclusion that the partner is similarly responsive may be compelling. Indeed, prior research does suggest projection of communal responsiveness. Kenny and Acitelli (2001) found evidence of projection bias using a single-item measure of the frequency of partner caring in the past month. Our prior research also provides evidence; people presumed that their spouse's support provision and their spouse's motivation to respond to their needs were more similar to their own support provision and communal motivation than was indicated by the spouse's reports (Lemay et al., 2007, Studies 1 and 2). Moreover, an experimental manipulation designed to alter perceptions of one's own responsiveness to a partner affected perceptions of the partner's responsiveness (Lemay et al., 2007, Study 3).

This is not to say that the projection of responsiveness (Path A in Figure 1) is *always* much greater than accurate discernment of the partner's responsiveness (Path B in Figure 1). Indeed, accuracy may prevail when the evidence is clear. For instance, even caring perceivers may perceive partners as uncaring when those partners consistently behave in ways that unequivocally communicate lack of care (i.e., they usually behave in ways that are readily interpreted as caustic, demeaning, or neglectful). Likewise, even uncaring perceivers may perceive partners as caring when those partners consistently and unequivocally express their care. However, projection may frequently occur because the evidence is rarely so clear. Partners usually exhibit a variety of behaviors that are inconsistent or ambiguous with respect to their messages about communal responsiveness, creating sufficient latitude for egocentric perception.

The current research examines what projections of communal responsiveness might do for perceivers. Although they differ in the specifics, a number of theorists have posited that social perception can facilitate perceivers' pursuit of goals (e.g., Bruner, 1957; Ferguson & Bargh, 2004; Fiske, 1992; Gangestad, Simpson, DiGeronimo, & Biek, 1992; James, 1890; Kunda, 1990; Roskos-Ewoldsen & Fazio, 1992), and this perspective has been applied to interpersonal perception within close relationships (Gill & Swann, 2004; Murray, 1999). We expect that projecting their own responsiveness onto partners assists caring perceivers in thinking and

behaving in ways that promote mutual communal relationships. It may also assist uncaring perceivers in justifying their own lack of responsiveness and even in moving away from commitments to such relationships. Next we explain why.

Should One Seek a Communal Relationship? An Interdependence Dilemma

With a few exceptions (e.g., parent–child relationships), people expect and hope that their close relationships are characterized by mutual responsiveness of roughly equal magnitude (Clark & Mills, 1993; J. G. Holmes & Rempel, 1989; Reis et al., 2004). Those who are concerned for a partner's welfare and are motivated to respond supportively to a partner's needs desire a mutual communal relationship in which the partner is similarly concerned and motivated. Indeed, a likely determinant of whether people maintain, express, and implement their desires for a mutually responsive relationship is the perception that the partner harbors similar desires (cf. J. G. Holmes & Rempel, 1989). People tend to avoid investing in relationships that might prove hurtful, and the discovery that a partner does not reciprocate one's interest is a potent source of hurt (Baumeister, Wotman, & Stillwell, 1993; Leary, Springer, Negel, Ansell, & Evans, 1998; Murray et al., 2006). In addition, people must judiciously seek receptive partners, lest the time and resources spent to establish mutual communal relationships be wasted (Tooby & Cosmides, 1996). Perhaps the most adaptive response to learning that a partner does not reciprocate interest in a communal relationship is to disengage from the goal of establishing it and seek communal relationships elsewhere (cf. Wrosch, Scheier, Miller, Schulz, & Carver, 2003). Murray et al.'s (2006) research on dependency-regulation suggests that people do distance themselves from partners when they have doubts about those partners' caring and acceptance. Lack of trust in a partner's responsiveness also predicts reduced willingness to sacrifice and fewer prosocial responses to conflict (Wieselquist, Rusbult, Foster, & Agnew, 1999). Concerns about protecting the self from seeking and investing in an uncaring partner may instill a cautious mindset in which people are reluctant to think or behave in ways that promote communal relationships, as these thoughts and behaviors usually also heighten the pain of rejection, further increase dependence, and exacerbate sunk costs. Thus, when seeking new communal relationships and when experiencing uncertainty about established relationships, people should be especially interested in discerning the other's care (Clark, Dubash, & Mills, 1998; Lydon, Jamieson, & Holmes, 1997), as such care suggests the utility and wisdom of relationship pursuit.

However, discerning a partner's communal desires is fraught with ambiguity. Information regarding a partner's feelings and motives must be gleaned indirectly from behavioral expressions, which often tend to be more cryptic and indirect than transparent and diagnostic (Baumeister et al., 1993; DePaulo, Kashy, Kirkendol, Wyer, & Epstein, 1996; Felson, 1980). Evidence also is often inconsistent, with partners showing a mix of responsive and unresponsive behaviors and sometimes deviating from communal norms in even the most normatively communal relationships (Clark, Graham, & Grote, 2002). Furthermore, situational factors often tax partners' capacity to respond supportively (Finkel & Campbell, 2001; Yovetich & Rusbult, 1994), and their support attempts may have unintended negative effects (Bolger et al., 2000; Coyne, Wortman, & Lehman, 1988). Even when they have unequivocally expressed their communal sentiments in the past, doubts about the longevity of those sentiments may remain. Hence, it is not surprising that perceptions of partners' responsiveness show only modest relations to partners' reports; there is a good deal of "noise" in inferring their sentiments (Tazelaar, Van Lange, & Ouwerkerk, 2004). This state of affairs creates an approach-avoidance dilemma; to approach and promote a communal relationship, one must be confident that the partner desires the same sort of relationship and will be responsive. At the same time, the fact that evidence for partner responsiveness is typically shaky suggests that one should self-protectively avoid the relationship rather than approach it.

Resolving and Bypassing the Dilemma by Projecting Communal Responsiveness

In the face of such uncertainty, how do people dispel their doubts and proceed with relationship promotion or, alternatively, self-protectively resist investing in the relationship. The projection of one's own communal responsiveness might reduce uncertainty. Those who are themselves responsive and desire a mutually communal relationship can cast aside their doubts and harvest the necessary confidence in a partner's communal responsiveness by projecting their own communal concerns and motives onto the partner. This may allow perceivers to entertain cognitions and enact behaviors that promote the growth of close, communal relationships, despite the ambiguity of the partner's expressions. Those who do not care for a particular partner and do not desire a relationship with the partner can resolve their doubts about the possibility of foregoing a responsive partner by projecting their lack of responsiveness. A subjective approach-avoidance dilemma may be bypassed when people do not explicitly and effortfully consider their partner's responsiveness but rather project their own responsiveness onto partners. Such automatic projection of goals has been shown to occur (Kawada, Oettingen, Gollwitzer, & Bargh, 2004).

This perspective is consistent with prior research on functional projection of emotion and functional interpersonal cognition. Maner et al. (2005) reported evidence suggesting that perceivers project emotions onto others in a manner that facilitates perceivers' goal pursuit. When a self-protection goal was activated, perceivers viewed outgroup targets as angry, a response that could heighten vigilance and serve the self-protection goal. When a mate-search goal was activated, male perceivers viewed attractive female targets as sexually aroused, a response that could facilitate approach and, in turn, service the mate-search goal. Similarly, those who desire a communal relationship may project their own communal motives onto partners, and this projection may functionally quell self-protective concerns and motivate cognitions and behaviors that aid in the pursuit of a mutually responsive relationship.

Research on interpersonal cognition also suggests functional biases. Simpson, Ickes, and Blackstone (1995) provided evidence suggesting that the "head protects the heart"—people maintain security in their romantic partner's affections by misperceiving their partner's reactions to an attractive alternative partner. Relationships were more likely to persist when partners exhibited this protective bias to a similar degree (see also Simpson, Orina, & Ickes, 2003). Murray, Holmes, and Griffin (1996a, 1996b) provided evidence suggesting that people resolve relationship insecu-

This document is copyrighted by the American Psychological Association or one of its allied publishers.
This article is intended solely for the personal use of the individual user and is not to be disseminated broadly.

rities that arise from doubts about investing in a less-than-ideal partner by idealizing their partner's traits. Moreover, those who idealized partners enjoyed greater satisfaction, relationship stability, and decreased conflict (see also Murray, Holmes, Bellavia, Griffin, & Dolderman, 2002). This research suggests functional cognitive biases in perceiving close relationship partners. People often believe they have the relationships they desire, and in many cases, such wishful thinking promotes behaviors that ultimately bring desires to fruition, at least from the perceiver's subjective stance. For caring perceivers, projection of responsiveness might not only "protect the heart" by providing the perception that one is cared for, indeed loved (Clark & Monin, 2006), but it may also "liberate the heart" by assuaging self-protective concerns so that people have the confidence to promote the communal bond, to love.

As Figure 1 illustrates, we expect that perceptions of partner responsiveness are largely projected (Path A) but also contain a kernel of truth (Path B). Subjective perceptions of the partner's responsiveness should, in turn, predict relationship-promotion outcomes (Path C). Moreover, if those who report communal motivation are willing to promote a communal relationship, in part, because they project that motivation, then the direct effect of own responsiveness on relationship promotion (Path D) should be reduced once we control for projection of responsiveness. Such a pattern would suggest that projection of responsiveness assists caring perceivers in focusing on relationship promotion rather than self-protection.

Indices of Relationship Promotion

We used several indices of relationship promotion in the current research, including positive evaluation, attraction, self-disclosure, and support provision. Positive evaluations of the partner ought to promote communal relationships, as evaluation directs behavior toward rewarding objects and away from harmful objects (Ferguson & Bargh, 2004; Roskos-Ewoldsen & Fazio, 1992). Indeed, Murray et al.'s (2006) dependency-regulation research suggests that negative partner evaluation reflects a desire to distance from the relationship. In regard to new acquaintances, attraction—wanting to learn more about and desiring to establish a closer relationship with the acquaintance—may suggest a desire to promote a communal bond. Self-disclosure—the sharing of information about the self—is thought to facilitate the development of close relationships (Altman & Taylor, 1973; S. Cohen, Sherrod, & Clark, 1986). It plays a crucial role in establishing intimacy and a sense of understanding, validation, and care in the relationship (Laurenceau et al., 1998; Reis & Shaver, 1988). Failure to disclose suggests a desire to avoid intimacy (Mikulincer & Nachshon, 1991). Hence, self-disclosure is another index of an orientation toward promoting a bond. Providing support to partners is yet another index of one's willingness to promote a mutual communal relationship. Chronic desires for mutual communal relationships and manipulations designed to increase desires for a communal bond predict increased helping behavior, especially when the potential recipient appears to need help (Clark, Ouellette, Powell, & Milberg, 1987). In contrast, those who desire to avoid intimacy and dependence are especially unlikely to provide support when their partners need it (Simpson, Rholes, & Nelligan, 1992).

Maintaining or increasing communal motivation over time also may indicate a desire to promote a mutual communal relationship. Those who are initially motivated to respond supportively to a partner's needs may maintain or increase that motivation over time by projecting their own responsiveness onto partners and then regulating their subsequent motivation in accordance with those projected perceptions (see Figure 2). These processes working together may, in part, explain the temporal stability of own responsiveness and perceptions of partner responsiveness. Consider a person who cares for his/her friend. He or she may perceive the friend as being just as caring through the projection process. Armed with confidence in the friend's caring, the person may continue caring for the friend over time. That is, the temporal stability of the individual's own responsiveness may, in part, be due to the combination of projecting responsiveness and then regulating responsiveness in accordance with projected perceptions. Later, that maintained level of caring is projected. Thus, the temporal stability of the individual's perceptions of the friend's responsiveness may, in part, be due to the combination of regulating and then projecting own responsiveness.

Research Overview

In five studies, we tested the prediction that projected perceptions of a partner's responsiveness guide relationship promotion. In Study 1, we examined effects of a manipulation of perceived responsiveness to an existing partner on perceptions of the partner's responsiveness and evaluation of the partner. In Study 2, we examined effects of a manipulation of communal motivation toward a new acquaintance on perceptions of that acquaintance's responsiveness, attraction to the acquaintance, and subsequent behavioral warmth toward the acquaintance. In Study 3, we tested

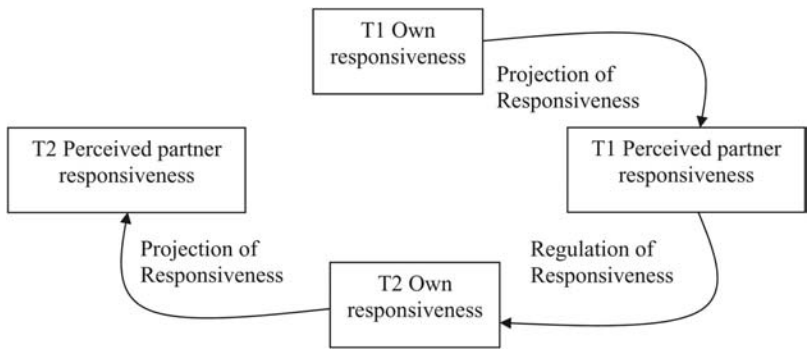

Figure 2. Model of a longitudinal projection of responsiveness/relationship-promotion cycle.

This document is copyrighted by the American Psychological Association or one of its allied publishers.
This article is intended solely for the personal use of the individual user and is not to be disseminated broadly.

effects of projected responsiveness on partner evaluation and willingness to self-disclose using a longitudinal, dyadic friendship study. We also tested the longitudinal projection-promotion model displayed in Figure 2. In Study 4, we tested the longitudinal projection-promotion model in a dyadic marriage study. In Study 5, we tested effects of projected responsiveness on partner evaluation, self-disclosure, and support provision within a cross-sectional study of three-person groups. This study also allowed us to test our assumption that the projection of responsiveness is a dyadic process. Moreover, in Study 5 we tested whether behavioral forms of relationship promotion are perceived by partners.

Study 1

In the first study, we tested the hypotheses that experimentally manipulated felt responsiveness to an existing relationship partner would be projected, resulting in analogous changes in perceptions of the partner's responsiveness to the self (Path A in Figure 1) and that projected perceptions of partner responsiveness would, in turn, affect relationship promotion (evaluation of the partner; Path C in Figure 1). We also tested whether changes in mood could explain these effects.

Method

Participants and Procedure

Participants were recruited via advertisements on Internet bulletin boards for participation in an electronic survey in exchange for entry in a $100 raffle. The 96 participants included 15 men and 81 women (*M* age = 34.89 years). After completing a series of questions not relevant to the current research, participants completed the remainder of the survey in regard to a romantic partner if they were currently in a romantic relationship ($n = 72$) and in regard to a close friend if they were not currently in a romantic relationship ($n = 24$). Participants randomly assigned to the neutral condition ($n = 48$) completed an open-ended question in response to the following prompt: "Think of a time when you were with this person and nothing unusual happened. That is, think of a time you spent together that was typical of the time you usually spend with this person. Vividly imagine the situation and then describe what happened on the lines below." Participants randomly assigned to the unresponsive condition ($n = 48$) instead completed an open-ended question in response to the following prompt: "Think of a time when you treated this person badly. For example, you may have done or said something that hurt this person's feelings, you may have neglected this person's needs or desires, or you may have been unpleasant. Vividly imagine the situation and then briefly describe what happened on the lines below." All participants then completed the dependent measures described below.

Measures

Own responsiveness. Participants' own felt responsiveness to the partner's needs was assessed with a three-item measure ("I would sacrifice a lot for this person," "I care about this person," "I would go out of my way to help this person") answered on 6-point response scales (1 = *strongly disagree,* 6 = *strongly agree*; $\alpha = .90$).

Perceived partner responsiveness. Participants' perceptions of the partner's responsiveness was assessed with an analogous three-item measure (e.g., "This person would go out of his/her way to help me") answered on identical response scales ($\alpha = .86$).

Evaluation of partner. Participants' evaluations of the partners were assessed with a nine-item measure ("This person treats others kindly"; "This person is well-liked by others"; "This person is cruel to others"; "This person is a person of worth, at least on an equal basis with others"; "This person has a number of good qualities"; "I take a positive attitude toward this person"; "This person treats others with respect"; "This person has more shortcomings and flaws than the average person"; "This person does not have much to be proud of") completed using identical response scales. Responses to negatively worded items were reverse scored ($\alpha = .92$).

Mood. Participants indicated the extent to which they presently felt six emotions (afraid, angry, happy, sad, alert, and content) using 5-point response scales (1 = *very slightly or not at all,* 5 = *extremely*). After we reverse scored responses to the negative emotions, we averaged responses to create an index of mood ($\alpha = .67$).

Results and Discussion

A correlation matrix of all primary independent and dependent variables appears in Table 1. With the exception of the direct link between perceived partner responsiveness and experimental condition, all variables were significantly or marginally correlated.

Given our predictions of multiple indirect paths linking the experimental condition to partner evaluation, we used path analysis (with the SAS CALIS procedure) to test hypotheses. The analyses used maximum-likelihood parameter estimation on the variance–covariance matrix. The tested model was guided by our predictions that the manipulation (coded 1 for the unresponsive condition, 0 for the neutral condition) would affect own responsiveness, own responsiveness would affect perceived partner responsiveness, and perceived partner responsiveness would affect partner evaluation. Participants who were made to feel unresponsive also may have derogated the partner as a means of justifying their lack of responsiveness, without this derogation depending on perceived partner responsiveness. Hence, we also modeled the residual direct effect of own responsiveness on partner evaluation. This model was a good fit to the data (goodness-of-fit index [GFI] = 1, comparative fit index [CFI] = 1, non-normed fit index = 1.05, root-mean-square error of approximation [RMSEA] = 0), $\chi^2(2, N = 96) = 0.28$, *ns*. Estimated standardized path coefficients are displayed in Figure 3. Path coefficients suggest that the ma-

Table 1
Correlation Matrix of Primary Independent and Dependent Variables (Study 1)

Variable	1	2	3	4
1. Condition	—	$-.21^{*}$	$-.15$	$-.17^{\dagger}$
2. Own responsiveness		—	$.57^{***}$	$.61^{***}$
3. Perceived partner responsiveness			—	$.63^{***}$
4. Partner evaluation				—

Note. Condition is coded in the unresponsive direction (1 = unresponsive, 0 = neutral).
$^{\dagger}p < .10$. $^{*}p < .05$. $^{***}p < .001$.

This document is copyrighted by the American Psychological Association or one of its allied publishers.
This article is intended solely for the personal use of the individual user and is not to be disseminated broadly.

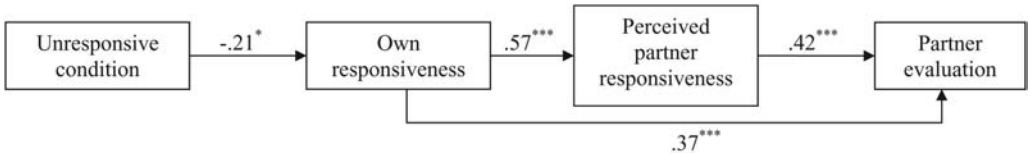

Figure 3. Results of path analysis (Study 1). $^{*}p < .05$. $^{***}p < .001$.

nipulation affected own responsiveness, which predicted perceived partner responsiveness (Path A in Figure 1), which in turn predicted evaluation (Path C in Figure 1). This analysis supports our model, suggesting that the manipulation of own responsiveness had indirect effects on relationship-promotion outcomes via effects on own responsiveness and, in turn, perceptions of partner responsiveness.[1]

Alternative Models

We tested whether the effects of own responsiveness on perceived partner responsiveness could be explained by partner evaluation. For instance, perhaps those who were made to feel unresponsive directly derogated the partner to justify their lack of responsiveness, and this derogation, in turn, predicted perceived partner responsiveness. Hence, we tested another model in which experimental condition predicted own responsiveness, own responsiveness predicted partner evaluation, and partner evaluation predicted perceived partner responsiveness. This model was not a good fit to the data, $\chi^2(3, N = 96) = 9.38$, $p < .05$.

Alternatively, perhaps the experimental condition predicted negative mood, which then contaminated people's relationship perceptions. However, the effect of experimental condition on mood was not significant ($p = .26$), although mood was significantly correlated with own responsiveness ($r = .21$, $p < .05$), perceived partner responsiveness ($r = .37$, $p < .001$), and evaluation of partner ($r = .30$, $p < .01$). Regression analyses that controlled for mood still revealed an effect of experimental condition on own responsiveness ($\beta = -.28$, $p = .068$; which was somewhat stronger when error variance because of relationship type was also controlled, $\beta = -.30$, $p = .05$), an effect of own responsiveness on perceived partner responsiveness ($\beta = .58$, $p < .001$), and an effect of perceived partner responsiveness on evaluation of partner ($\beta = -.35$, $p < .001$). Hence, mood did not appear to explain the pattern of results.

Study 2

In Study 2, we experimentally manipulated participants' responsiveness to a new acquaintance during a brief interaction and then measured perceptions of the acquaintance's responsiveness to the self. We expected that those who were induced to be responsive to their new interaction partners, relative to those who were induced not to be responsive, would perceive interaction partners as engaging in more responsive behaviors toward the self and as being more attracted to the self via the projection process (Path A in Figure 1). Of course, partners may react to this manipulated responsiveness by actually engaging in more responsive behaviors in return and by actually being more attracted. However, the projection-of-responsiveness model predicts the existence of projection after accounting for indices of the other's actual responsiveness (acquaintances' self-reported behavior and attraction in this study).

We also expected that projection of responsiveness would affect participants' willingness to promote the relationship (Path C in Figure 1). We examined participants' attraction (i.e., liking and desire for a closer relationship), expecting that participants assigned to be responsive to acquaintances would report greater attraction than would participants who were assigned not to be responsive and that this effect would be explained by participants' tendencies to see their own responsiveness or lack thereof in the behavior of the new acquaintance. Moreover, we assessed partic-

[1] We also tested hypotheses using traditional ordinary least squares regression analyses. Results were largely consistent with the model displayed in Figure 3. In these analyses, we included relationship type (romantic vs. not romantic) as a covariate in all analyses to reduce error variance due to this source. Doing so improved the strength of indirect effects, although relationship type was not confounded with condition. The Sobel test (Baron & Kenny, 1986) of the indirect effect of the manipulation on perceived partner responsiveness via own responsiveness was significant ($z = 2.02$, $p < .05$). The Sobel test of the indirect effect of the manipulation on evaluation via own responsiveness also was significant ($z = 2.07$, $p < .05$). Finally, the Sobel test of the indirect effects of own responsiveness on evaluation via perceived partner responsiveness (controlling for experimental condition) was significant ($z = 3.98$, $p < .001$). Detailed results of these analyses are available from the authors upon request.

Some readers may be concerned about the lack of a significant correlation between perceived partner responsiveness and experimental condition in Table 1. For instance, does this suggest that there is no indirect effect of the experimental condition on perceived partner responsiveness via an effect on own responsiveness? Although the traditional approach to mediation argues that a direct effect of the independent variable on the dependent variable is necessary (Baron & Kenny, 1986), more recent treatments have claimed that tests of indirect effects that require such a direct effect may be overly conservative and lack power, especially when there is an a priori belief that the effect size may be small (and the Study 1 manipulation is likely to produce a small effect, given the nature of the manipulation relative to the resilience of beliefs about one's own and a partner's responsiveness) and when the direct effect of the independent variable on the dependent variable changes sign when controlling for the mediator (and this was the case, although the reversed-sign direct effect was not significant; Fritz & MacKinnon, 2007; MacKinnon, Krull, & Lockwood, 2000; Shrout & Bolger, 2002). Some have argued that explicit tests of the indirect effect are more appropriate (MacKinnon, Lockwood, Hoffman, West, & Sheets, 2002), and those tests, presented above, support our model. Also, the insignificant correlation is, in part, due to error variance attributable to relationship type, gender, and our small sample size; once we reduced error variance by controlling for relationship type and gender, the direct effect of experimental condition on perceived partner responsiveness was marginal ($\beta = -.31$, $p = .07$). Moreover, some may argue that our directional hypothesis permits a one-tailed test. Using a one-tailed test, this regression coefficient is, of course, significant ($p < .05$).

This document is copyrighted by the American Psychological Association or one of its allied publishers.
This article is intended solely for the personal use of the individual user and is not to be disseminated broadly.

ipants' interpersonal warmth toward partners after the interaction and expected that projection-guided attraction would, in turn, predict increased subsequent warmth. Such a pattern would suggest that responsive participants pursue a close relationship after the interaction because they project their responsiveness.

Method

Participants

Eighty-six participants (33 men and 53 women; *M* age = 21 years) were recruited from flyers posted throughout a college campus and on electronic bulletin boards. In exchange for participation, participants received $10 or research-participation credit in a psychology course.

Procedure

Participants completed an electronic survey in which they provided demographic information and answered several personal open-ended survey items (e.g., "describe a humorous experience," "describe a unique accomplishment"). Then they reported in pairs to a laboratory session. After obtaining informed consent and verifying that the participants were not acquainted, the experimenter described the study. He explained that participants would have a 10-min interaction in which they would share their answers to the open-ended questions they answered during the online survey. He then gave each participant a printed page that included their answers to each question, preceded by a few additional questions (e.g., first name, hometown, year in college, career aspirations). Participants then drew a piece of paper and announced whether they drew the letter *A* or the letter *B*. The experimenter explained that he would describe the meaning of this drawing later. Participants were then ushered into separate rooms to look over (and change if they desired) their answers.

During this time, the experimenter privately explained to the participant who drew the letter A (termed *actor*) that the study was about how particular types of behaviors affected social interactions. To examine this, he explained, he gives instructions to the person who drew the letter *A* regarding how to behave toward the other participant (termed *partner*) during the interaction. The experimenter then gave this participant an instruction sheet that reiterated the explanation of procedures (just described) and provided behavioral instructions. Participants randomly assigned to the responsive condition then read the following instructions: "During the interaction, please behave in a positive manner toward the other participant. Act as if you are interested in and impressed by the other person. That is, be friendly and encouraging." Participants randomly assigned to the neutral behavior condition instead read the following instructions: "During the interaction, please behave in a neutral manner toward the other participant. Act as if you are not particularly interested in or impressed by the other person. That is, do not be friendly or encouraging. However, do not be mean or rude either. Just be neutral." The experimenter verified that participants understood and believed they would be able to follow the instructions and suggested that participants write a reminder on their page of questions so they would remember to behave in the requested manner during the interaction. He also asked participants to refrain from disclosing the fact that they received instructions to the other participant. The participant who drew the letter *B* did not receive instructions. Participants were then reunited.

Participants then had an interaction in which they took turns sharing their answers to the questions. They were given 10 min for the interaction but could notify the experimenter (who was waiting in the other room) if they finished in fewer than 10 min. Participants then returned to the separate rooms to complete the dependent measures described below.

Measures

Own responsive behaviors. Using 9-point response scales (1 = *strongly disagree*, 5 = *neutral*, 9 = *strongly agree*), participants completed six items assessing their own responsive behavior during the interaction (i.e., "I was warm toward the other participant during the interaction," "I was supportive of the other participant during the interaction," "I expressed positive feelings toward the other participant during the interaction," "I expressed positive evaluations of the other participant during the interaction," "I was friendly toward the other participant during the interaction," "I made the other participant feel happy during the interaction"). We averaged responses to these six items to create an index of own responsive behavior (Cronbach's $\alpha = .96$).

Perceptions of partner's responsive behaviors. Using identical response scales, participants completed six analogous items assessing their perceptions of their interaction partner's responsive behaviors (e.g., "The other participant was warm toward me during the interaction"; $\alpha = .95$).

Perceptions of partner's attraction to the self. Using identical response scales, participants completed three items assessing their perceptions of the interaction partner's attraction to the self (e.g., "The other participant liked me during the interaction," "The other participant is interested in getting to know me better," "The other participant would like to start a friendship with me"; $\alpha = .89$).

Attraction to the partner. Using identical response scales, participants completed three analogous items assessing their own attraction to their interaction partner (e.g., "I would like to start a friendship with the other participant"; $\alpha = .91$).

Written-message warmth. Following the interaction and administration of all other dependent measures, participants wrote a note to their partner regarding how they perceived the interaction, ostensibly to be read by the other participant. The notes were rated on responsiveness by four coders who were unaware of participants' experimental condition and actor or partner status. Raters used 7-point response scales (1 = *not at all responsive*, 7 = *extremely responsive*) and were instructed to use the following definition of responsiveness: "friendly, warm, communicating care, positive evaluation, or interest in the other." Ratings of the responsiveness of the actors' written messages were internally consistent ($\alpha = .86$). Thus, they were averaged to form a single index of the actors' subsequent written-message warmth.

Results and Discussion

A correlation matrix of all primary model variables is provided in Table 2. Path analysis (with the SAS CALIS procedure) tested the fit of a model that posited that the manipulation (coded 1 for responsive-behavior condition, 0 for neutral-behavior condition) affects actors' self-perceived responsiveness, which affects actors' perceptions of partners' responsiveness (Path A in Figure 1),

This document is copyrighted by the American Psychological Association or one of its allied publishers.
This article is intended solely for the personal use of the individual user and is not to be disseminated broadly.

Table 2
Correlation Matrix of Primary Independent and Dependent Variables (Study 2)

Variable	1	2	3	4	5	6	7	8
1. Condition	—	.90***	.30†	.59***	.56***	.58***	.27†	.21
2. Actor's own responsiveness		—	.24	.50***	.63***	.70***	.39**	.24
3. Partners' own responsiveness			—	.54***	.19	.21	.02	.13
4. Partners' own attraction				—	.34*	.38*	.17	.01
5. Actors' perceived partner responsiveness					—	.56***	.51***	.40**
6. Actors' perceived partner attraction						—	.38*	.17
7. Actors' own attraction							—	.58***
8. Actors' written-message warmth								—

Note. Condition is coded in the responsive direction (1 = responsive; 0 = neutral).
† $p < .10$. * $p < .05$. ** $p < .01$. *** $p < .001$.

which affects actors' attraction to partners (Path C in Figure 1), which affects actors' written-message warmth following the interaction. The model also specified the manipulation as a cause of partners' responsiveness (allowing for the possibility that actors' manipulated behavior elicited concordant behavior from partners). However, preliminary analyses suggested that actors' perceptions of partners' responsiveness might not reflect partners' responsiveness (Path B in Figure 1) at all. Thus, the model did not specify partners' responsiveness as a cause of any of the other variables. The analysis used dyad as the unit of analysis and maximum-likelihood method of estimation on the variance–covariance matrix. The tested model and estimated standardized path coefficients are displayed in the upper portion of Figure 4. Path coefficients are consistent with predictions. This model was an excellent fit to the data (GFI = .96, CFI = 1, non-normed fit index = 1.07, RMSEA = 0), $\chi^2(10, N = 42) = 5.17$, *ns*.

As depicted in the lower portion of Figure 4, we tested a model that substituted partners' responsive behavior with partners' attraction and actors' perception of partners' responsive behavior with actors' perception of partners' attraction. This model posits an effect of the manipulation on actors' perceptions of partners' internal feelings (attraction) rather than on their perceptions of partners' behavior. This model also was an excellent fit to the data (GFI = .95, CFI = 1, non-normed fit index = 1.04, RMSEA = 0), $\chi^2(10, N = 42) = 7.03$, *ns*.[2]

We tested alternative models that also included accuracy paths (i.e., an effect of partners' responsive behavior/attraction on actors' analogous perceptions). These added paths did not significantly improve model fit—perceptions of behavior model $\Delta\chi^2(1) = 0.13$, *ns*; perceptions of attraction model $\Delta\chi^2(1) = 0.13$, *ns*.

It is important to note that the *actors' responsiveness* variable in these models resembles a manipulation check, and its strong association with the experimental condition may have been inflated by experimental demand characteristics (i.e., participants who were instructed to be responsive subsequently claiming that they were responsive because they felt that they should claim this). However, we believe that it is important to use actors' responsiveness as a mediator of the experimental condition in our models to test our assumption that actors' self-perceived responsiveness predicted downstream model variables. Models in which this variable was omitted still provided support for our theoretical perspective. Moreover, although the effect of experimental condition on actors' self-perceived responsiveness may have been inflated by experimental demand characteristics, partners' differential responsiveness and attraction in the two conditions suggest that actors actually behaved differently. Also, experimental demand cannot explain why actors who were manipulated to be responsive perceived partners as responsive in return, independent of partners' self-reported responsiveness.

Finally, it is important to note that actors were told that they could write anything that they wanted in their messages and that actors' perceptions of partners' responsiveness or attraction (and, in turn, actors' attraction to partners) completely mediated effects of the experimental condition and actors' own responsiveness on their written-message warmth. Thus, it is not the case that actors simply continued to follow the responsive or unresponsive interaction instructions when writing their messages (which took place after the interaction and after completion of several other depen-

[2] We also tested hypotheses using traditional OLS regression analyses. In all analyses, the appropriate partners' report (responsive behavior in models involving perceived partners' responsive behavior and attraction in models involving perceived partners' attraction) was controlled. Results of these analyses were largely consistent with the results displayed in Figure 4. Indirect effects of experimental condition on perceived partner responsive behavior and perceived partner attraction, mediated by own responsiveness, were significant (Sobel's *z*s = 2.18 and 3.44, *p*s < .05 and < .001, respectively). The indirect effect of experimental condition on actors' attraction, mediated by perceived partner responsive behavior, was significant (Sobel's $z = 2.46$, $p < .05$), whereas the indirect effect of experimental condition on actors' attraction, mediated by perceived partner attraction, was marginal (Sobel's $z = 1.69$, $p < .10$). Finally, indirect effects of perceived partner responsive behavior and perceived partner attraction on written message warmth, mediated by actors' attraction (controlling for experimental condition), were significant (Sobel's $z = 2.28$, $p < .05$) and marginal (Sobel's $z = 1.69$, $p < .10$), respectively. Detailed results of these analyses are available from the authors upon request. Again, although some of the zero-order correlations were not significant, these analyses suggest indirect effects that are consistent with our predictions (see Footnote 1). Also, zero-order correlations between experimental condition and actors' written message warmth, between actors' responsiveness and partners' responsiveness, between actors' responsiveness and actors' written message warmth, and between partners' responsiveness and actors' perceived partner attraction were marginal when using one-tailed tests (*p*s < .10).

The model paths shown in Figure 4 were not moderated by gender, although two residual effects of upstream variables on downstream variables, controlling for mediating variables, were significantly moderated by gender. Details of these analyses are available from the authors upon request.

This document is copyrighted by the American Psychological Association or one of its allied publishers.
This article is intended solely for the personal use of the individual user and is not to be disseminated broadly.

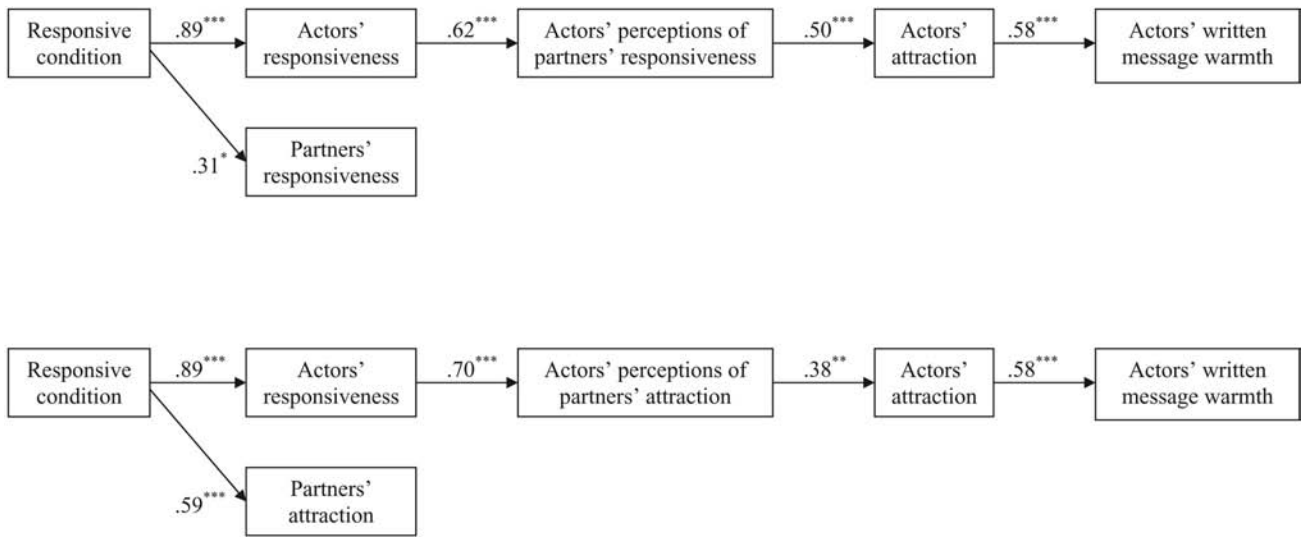

Figure 4. Results of path analyses (Study 2). $^{*}p < .05$. $^{**}p < .01$. $^{***}p < .001$.

dent measures). Instead, it seems that their tendencies to see their own responsiveness reflected back to them in partners' behavior explained their continued warmth toward partners.

This study provides support for several of our hypotheses. First, it provides additional experimental evidence for the projection of responsiveness, extending results of Study 1 to a behavioral manipulation of responsiveness. Second, it provides evidence that the projection of responsiveness affects willingness to promote a relationship with a new acquaintance, in terms of self-reported attraction and subsequent warmth toward the partner. Those who were manipulated to be responsive appeared to project their responsiveness, which appeared to enhance their attraction to the partner and promote continued warmth toward the partner after the interaction. There was little evidence of accuracy in this study—partners' self-reported attraction and responsiveness did not predict actors' perceptions. Perhaps this was the case because, in our efforts to experimentally control actors' responsiveness through providing behavioral instructions, actors were overly focused on their own behavior during the interaction. Indeed, we did find evidence of a small accuracy effect in subsequent studies.

Study 3

The third study is a longitudinal dyadic study on friendship. In this study, we tested effects of projected responsiveness on evaluation of the partner, as done in Study 1, as well as a second index of relationship promotion: self-disclosure. In particular, we examined willingness to express feelings of hurt and sadness caused by the relationship partner. Such emotions likely involve a sense of vulnerability (a low sense of control and a high sense of uncertainty; Smith & Ellsworth, 1985), and they thus communicate trust in the partner (cf. Clark & Finkel, 2005). Moreover, the expression of hurt and sadness caused by one's partner may communicate to the partner that the expresser values the relationship. We expected that caring perceivers would be willing to express these emotions because they project their own care onto partners (see Figure 1). That is, the projection process provides them with the desire for increased closeness that motivates self-disclosure and the confidence necessary to disclose vulnerabilities.

We also tested the hypothesized longitudinal projection/relationship-promotion cycle (see Figure 2). That hypothesized cycle predicts that a perceiver's initial caring for a partner's needs influences the perceiver's judgment of the partner's caring through the projection process. In turn, these projected perceptions should affect the perceiver's later caring for the partner. This subsequent responsiveness then may be projected.

Method

Participants and Procedure

Sixty dyads were recruited for a study on friendship from electronic bulletin boards and newspaper advertisements. Five dyads were dating couples who considered themselves to be friends. The remaining 55 dyads were platonic friends. The dyads included 32 female pairs, 10 male pairs, and 18 mixed-sex pairs. Ages ranged from 17 to 45 years ($M = 21$). Most participants ($n = 116$) were college students. Upon recruitment, they completed a series of questionnaires (T1). Approximately 5 months later ($M = 139$ days), 39 intact dyads completed a follow-up questionnaire (T2).[3] T1 analyses were based on data from the whole sample. T2 and longitudinal analyses were based on data from this reduced sample.

Measures

Own responsiveness. Participants completed a four-item measure assessing motivations to care for their friends ("I care for this person," "I would go out of my way to help this person," "I would give up a lot to help this person," "I don't care about this person";

[3] Actually, 92 of the original 120 participants completed the T2 questionnaire. Because the current analyses involve data from both partners, only the 37 intact dyads that completed the T2 questionnaire were used. We used t tests to compare the participants who did not complete the T2 questionnaire with those who did on all of the T1 measures in this study. No effects were statistically significant. Thus, we are reasonably confident that the T2 sample was not biased.

This document is copyrighted by the American Psychological Association or one of its allied publishers.
This article is intended solely for the personal use of the individual user and is not to be disseminated broadly.

T1 α = .86, T2 α = .81). Items were answered on a 6-point response scale (1 = *strongly disagree*, 6 = *strongly agree*), and the negatively worded item was reverse-scored.

Perceptions of friend's responsiveness. Using the same response scales, participants completed an analogous measure assessing perceptions of their friends' motivation to care for their needs (e.g., "This person cares about me"; T1 α = .84, T2 α = .84).

Willingness to express vulnerability. Using the same response scales, participants completed two items assessing their willingness to express sadness and hurt feelings (i.e., "If this person made me sad, I would express it to him/her"; "If this person hurt my feelings, I would express it to him/her"; T1 α = .90; T2 α = .95).

Evaluation of friend. Participants completed two measures of their evaluation of the friend. They indicated the extent to which nine positive interpersonal traits (e.g., *witty and humorous, considerate, kind and affectionate, warm*) and seven negative interpersonal traits (e.g., *critical and judgmental, thoughtless, distant, demanding*) described their friend generally on a 9-point response scale (1 = *not at all characteristic*, 9 = *completely characteristic*; T1 α = .80, T2 α = .85). These traits were taken from the Interpersonal Qualities Scale (Murray et al., 1996a). The second measure was a 2-item measure assessing global evaluation ("I view this person positively," "This person has a number of good qualities"; T1 α = .84, T2 α = .75). Scores on the two measures were significantly correlated (T1 $r = .43$, T2 $r = .56$, $ps < .001$), and we standardized and averaged them to create an index of evaluation at each assessment wave.

Results and Discussion

Analysis Strategy

We examined effects of perceivers' responsiveness and friends' responsiveness on perceivers' perceptions of friends' responsiveness. The effect of friends' responsiveness on perceivers' perceptions indicates accuracy or understanding (Path B in Figure 1); the effect of perceivers' own responsiveness to friends on perceivers' perceptions indicates projection (Path A in Figure 1; cf. Kenny & Acitelli, 2001; Murray et al., 1996a). We used mediation analyses to examine the degree to which projected responsiveness predicted relationship promotion (evaluation of the partner, willingness to express vulnerability; Path C in Figure 1). An effect of projected responsiveness on relationship promotion is indicated by a significant indirect effect of perceivers' own responsiveness on their relationship promotion, mediated by their perceptions of friends' responsiveness while controlling for friends' self-reported responsiveness. Such a pattern would suggest that, independent of partners' self-reported caring, caring perceivers are more willing to promote the relationship than are uncaring perceivers because they see partners as more responsive to them. The indirect paths were formally tested with Sobel tests (Baron & Kenny, 1986). Given that the two partners' reports are dependent within dyads, hypotheses were tested with the SAS MIXED procedure. Intercepts were modeled as randomly varying across dyads, which modeled the nested data structure. Because of the restricted degrees of freedom within dyads, slopes were modeled as fixed (cf. Campbell & Kashy, 2002; Kenny, Kashy, & Cook, 2006).

Correlations

A correlation matrix of all study variables appears in Table 3.

Projection of Responsiveness

A series of analyses tested the simultaneous effects of perceivers' own responsiveness (projection) and friends' responsiveness (accuracy or understanding) on concurrent perceptions of friends' responsiveness. At both assessment waves, perceivers' own responsiveness predicted their perceptions of friends' responsiveness (T1 $b = .79$, $p < .001$; T2 $b = .99$, $p < .001$), suggesting projection of responsiveness. At T1, friends' responsiveness also predicted perceivers' perceptions ($b = .13$, $p < .05$), suggesting a small kernel of truth in perceivers' perceptions. At T2, this effect was not significant, $t(75) = .87$. These coefficients are unstandardized, averaged within-dyad slopes. For example, every one-unit increase in perceivers' own responsiveness at T1 was accompanied by a 0.79-unit increase in perception of friends' responsiveness. These analyses replicate projection findings of Studies 1 and 2 with a nonexperimental design.

Regulating Relationship Promotion

An additional set of analyses tested predictions regarding effects of projected responsiveness on indices of relationship promotion (evaluation of friend and willingness to disclose vulnerability). These analyses involved pairs of models. In the first model, the

Table 3
Correlation Matrix of Variables (Study 3)

Variable	1	2	3	4	5	6	7	8
1. T1 own responsiveness	**.5*****	.8***	.35***	.68***	.74***	.55***	.27*	.29*
2. T1 perceived friend responsiveness	.5***	**.49*****	.42***	.66***	.67***	.67***	.4**	.3*
3. T1 willingness to express vulnerability	.23*	.29**	**.24**†	.23*	.36**	.31**	.72***	.07
4. T1 evaluation of friend	.33**	.35**	.08	**.24**†	.5***	.35**	.22†	.54***
5. T2 own responsiveness	.31*	.37**	.22†	.22†	**.26**	.77***	.45***	.53***
6. T2 perceived friend responsiveness	.32*	.29*	.25*	.36**	.26†	**.19**	.5***	.56***
7. T2 willingness to express vulnerability	.19	.26*	.24†	.07	.21	.26**	**.39***	.28*
8. T2 evaluation of friend	.06	.09	.02	.26*	.1	.06	.13	**.25**

Note. Values on the diagonal (which is indicated by boldface values) are pairwise intraclass correlations, which are the correlations of the two partners' reports. Values above the diagonal are bivariate intrapersonal intraclass correlations, reflecting the association of two variables measured on the same partner. Values below the diagonal are bivariate interpersonal intraclass correlations, reflecting the association of two variables measured on different partners. All correlations were computed with the double-entry method (cf. Griffin & Gonzalez, 1995; Kenny, Kashy, & Cook, 2006).
$^{\dagger}p < .10$. $^{*}p < .05$. $^{**}p < .01$. $^{***}p < .001$.

This document is copyrighted by the American Psychological Association or one of its allied publishers.
This article is intended solely for the personal use of the individual user and is not to be disseminated broadly.

Table 4
Effects of Own Responsiveness and Friends' Responsiveness on Indices of Relationship Promotion as a Function of Controlling for Perceived Friend Responsiveness (Study 3)

Predictor	T1 Model 1	T1 Model 2	T2 Model 1	T2 Model 2
Predicting evaluation of friend				
Own responsiveness	.92***	.59***	.92***	.42†
Friends' responsiveness	−.02	−.07	−.08	−.12
PFR	—	.41**	—	.50**
Predicting willingness to express vulnerability				
Own responsiveness	.54**	.09	.84***	.40
Friends' responsiveness	.12	.05	.19	.15
PFR	—	.56*	—	.45*

Note. PFR = perceived friend responsiveness.
† $p < .10$. * $p < .05$. ** $p < .01$. *** $p < .001$.

relationship-promotion outcome variable was regressed on perceivers' responsiveness and friends' responsiveness. In the second model, perceivers' perceptions of friends' responsiveness was included as an additional predictor. Results are displayed in Table 4. As expected, own responsiveness predicted friend evaluation and willingness to disclose at both assessment waves in Model 1. In addition, once perceived friend responsiveness was controlled for in Model 2, the effects of own responsiveness on willingness to disclose were eliminated, suggesting full mediation, and the effects of own responsiveness on friend evaluation were reduced, suggesting partial mediation. Sobel tests confirmed the significance of indirect effects (own responsiveness → perceived partner responsiveness → relationship promotion; T1 evaluation $z = 2.89$, $p < .01$; T2 evaluation $z = 2.79$, $p < .01$; T1 disclosure $z = 2.45$, $p < .05$; T2 disclosure $z = 2.01$, $p < .05$). These results suggest projection-guided relationship promotion at both assessment waves; participants who cared for their friends evaluated those friends more positively and reported greater willingness to disclose hurt feelings and sadness (Path C in Figure 1), relative to those who did not care for their friends, largely because they *perceived* their friends as caring in return, independent of friends' self-reported caring.[4]

We also hypothesized a longitudinal projection/relationship-promotion cycle in which T1 own responsiveness predicts T1 perceived partner responsiveness via projection, T1 perceived partner responsiveness predicts T2 own responsiveness as a form of projection-guided relationship promotion, and T2 own responsiveness predicts T2 perceived partner responsiveness via projection. To reiterate, this cycle posits mediation of temporal stability: Stability of own responsiveness is, in part, due to the confluence of T1 projection and longitudinal regulation of responsiveness, and stability of perceived partner responsiveness is, in part, due to the confluence of longitudinal regulation of responsiveness and T2 projection.

The predictors, criterion variables, and outcomes for the five models testing the model are displayed in Table 5. (All analyses are based on dyads with intact data at both assessment waves.) As predicted by the model, T1 own responsiveness predicted T1 perceived partner responsiveness after controlling for partners' responsiveness (Model 1), and the effect of T1 own responsiveness on T2 own responsiveness (temporal stability) was reduced after controlling for T1 perceived partner responsiveness (compare T1 own responsiveness effects in Models 2 and 3). T1 perceived partner responsiveness tended to predict residualized change in

[4] We also tested whether T1 projection of responsiveness predicted longitudinal changes in relationship promotion. In these analyses, we regressed T2 evaluation of friend or willingness to disclose on the same variable assessed at T1 (to model residualized change) along with T1 perceivers' own responsiveness and T1 partners' responsiveness. In a second model, we included T1 perceivers' perceptions of partners' responsiveness. These analyses did not provide evidence for a longitudinal mediation effect; T1 own responsiveness did not predict residual change in evaluation or willingness to disclose in the initial models (ps $> .52$), and perceived partner responsiveness did not predict residual change once it was included as an additional predictor (ps $> .10$). The temporal stabilities of willingness to disclose and friend evaluation were substantial, perhaps reducing effects of other variables.

In addition, although this analytic strategy is a typical means of testing longitudinal effects, it is very restrictive in terms of the particular process model it tests. These analyses posit that T1 projected perceptions of a partner's responsiveness should have unique effects on T2 evaluation and self-disclosure after accounting for its effects on current evaluation and self-disclosure. That is, this analysis presumes that the effect requires time. However, an effect of perceived partner responsiveness on evaluation or willingness to disclose actually may happen immediately.

Some (J. Cohen, Cohen, West, & Aiken, 2003) have suggested a different test of a fast-acting change process. Specifically, an effect of the T2 predictor on the T2 outcome while controlling for the T1 predictor and the T1 outcome may suggest a fast-acting change process. Indeed, when we controlled for T1 and T2 partners' responsiveness, T1 and T2 own responsiveness, T1 perceived partner responsiveness, and the T1 assessment of the criterion, we found that T2 own responsiveness predicted both T2 willingness to express vulnerabilities ($b = .96$, $p < .001$) and T2 partner evaluation ($b = 1.07$, $p < .001$). These effects were reduced after we also controlled for T2 perceived partner responsiveness ($b = .56$, $p < .05$ and $b = .39$, $p = .13$, respectively). T2 perceived partner responsiveness predicted both willingness to express vulnerabilities ($b = .42$, $p < .05$) and evaluation of partner ($b = .71$, $p < .001$). Hence, residual change in own responsiveness appeared to predict residual change in perceived partner responsiveness, which appeared to predict residual change in these relationship-promotion outcomes. We do not emphasize these results because of their ambiguity (i.e., predictors and criterion assessed as the same point in time).

This document is copyrighted by the American Psychological Association or one of its allied publishers.
This article is intended solely for the personal use of the individual user and is not to be disseminated broadly.

Table 5
Results of Analyses Testing the Projected-Responsiveness/Relationship-Promotion Cycle (Study 3)

	Predicting T1 perceived friend responsiveness	Predicting T2 own responsiveness		Predicting T2 perceived friend responsiveness	
Predictor variable	Model 1	Model 2	Model 3	Model 4	Model 5
T1 friends' responsiveness	.21*	−.04	−.08	−.11	.04
T1 own responsiveness	.86***	.71***	.55***	.04	−.48**
T1 perceived friend responsiveness	—	—	.19†	.69***	.51***
T2 friends' responsiveness	—	—	—	.09	−.01
T2 own responsiveness	—	—	—	—	.95***

Note. Coefficients are unstandardized coefficients.
† $p < .10$. * $p < .05$. ** $p < .01$. *** $p < .001$.

own responsiveness ($p = .08$; Model 3). The indirect effect (T1 own responsiveness → T1 perceived partner responsiveness → T2 own responsiveness) approached conventional significance levels (Sobel's $z = 1.75$, $p = .08$), suggesting that the temporal stability of own responsiveness was partially indirect via a combination of T1 projection and longitudinal regulation of responsiveness. In addition, the effect of T1 perceived partner responsiveness on T2 perceived partner responsiveness (temporal stability) was reduced after controlling for T2 own responsiveness (compare T1 perceived partner responsiveness effects in Models 4 and 5). T2 own responsiveness predicted T2 perceived partner responsiveness (Model 5), suggesting T2 projection. The indirect effect (T1 perceived partner responsiveness → T2 own responsiveness → T2 perceived partner responsiveness) approached conventional significance levels (Sobel's $z = 1.70$, $p = .09$), suggesting that temporal stability in perceived partner responsiveness was partially indirect via a combination of longitudinal regulation of responsiveness and T2 projection.[5]

Summary

This study provided support for our model of projection-guided relationship promotion. Participants who cared for their friends claimed to be more willing to express feelings of hurt and sadness to those friends than did participants who did not care for their friends, and this appeared to be due to tendencies for participants to presume that their care was reciprocated, even after controlling for friends' self-reported care. Likewise, participants who cared for their friends evaluated their friends more positively than did participants who did not care for their friends, in part because those who cared thought that that care was reciprocated. Caring itself appeared to be regulated over time with earlier projected perceptions, partially explaining why those who initially cared for friends maintained that caring over time.

Study 4

Given that (a) the indirect effects in tests of the longitudinal projected-responsiveness relationship-promotion cycle in Study 3 were marginal, (b) the pattern of effects supporting the cycle is complex and has not yet been replicated elsewhere, and (c) whether or not the cycle pertains to romantic relationships is unknown, we sought to replicate these findings in a marriage study.

Method

Participants and Procedure

Soon-to-be-married heterosexual couples residing in the Pittsburgh, PA, area were recruited by a variety of means, including bridal fairs, the bridal registry at a local department store, ads in local newsletters, flyers, electronic bulletin boards, and word of mouth. Couples were eligible if they had never been married, were childless, and were scheduled to be married in the near future. Participants were predominately well-educated (80% finished college). On average, husbands were 27 years old and wives were 26 years old at the start of the study, although ages ranged from 20 to 38 years.

Couples completed consent forms and questionnaires in their own homes a few weeks before their wedding day (T1; $N = 108$ couples) and completed mailed questionnaires at their homes just after the 2nd year of marriage (T2; $M = 25$ months after wedding; $N = 96$ couples). Participants were instructed to refrain from sharing their questionnaire responses with their partners. All analyses are based on data from couples who completed both assessments.[6]

[5] We tested whether perceivers' gender moderated any of the effects. Gender did not moderate either of the concurrent projection effects, nor did gender moderate effects of own responsiveness or perceived partner responsiveness on expression of vulnerability or on temporal changes in own responsiveness. However, gender did moderate the effect of T1 perceived partner responsiveness on T1 evaluation of partner ($b = .51$, $p < .001$). The effect was stronger for men ($b = .75$, $p < .001$) than for women ($b = .24$, $p = .09$). However, this effect was not replicated at T2 or in any of the other studies, was not predicted, and was found in the context of testing many gender interactions. Hence, it may have been found by chance.

[6] Data from this study were also reported in Lemay, Clark, and Feeney (2007), Study 2. Findings regarding the longitudinal projection/relationship-promotion cycle were not reported in that research, although findings regarding concurrent projection of responsiveness were reported.

This document is copyrighted by the American Psychological Association or one of its allied publishers.
This article is intended solely for the personal use of the individual user and is not to be disseminated broadly.

Table 6
Correlation Matrix of Variables (Study 4)

Variable	1	2	3	4	5	6	7	8
1. T1 husbands' responsiveness	—	.10	.54***	.20*	.54***	.16	.33***	.07
2. T1 wives' responsiveness		—	.22*	.70***	−.02	.50***	.01	.30***
3. T1 husbands' PPR			—	.29**	.40***	.19†	.44***	.13
4. T1 wives' PPR				—	.03	.42***	.14	.43***
5. T2 husbands' responsiveness					—	.13	.62***	.11
6. T2 wives' responsiveness						—	.29**	.56***
7. T2 husbands' PPR							—	.41***
8. T2 wives' PPR								—

Note. PPR = perceived partner responsiveness.
† $p < .10$. * $p < .05$. ** $p < .01$. *** $p < .001$.

This document is copyrighted by the American Psychological Association or one of its allied publishers.
This article is intended solely for the personal use of the individual user and is not to be disseminated broadly.

Measures

Own responsiveness to partner's needs. Participants completed a measure of *communal strength* (Mills, Clark, Ford & Johnson, 2004)—a quantitative aspect of communal relationships reflecting the degree of motivation to be responsive to a specific communal partner's needs. The 10 items were answered on a 10-point response scale (0 = *not at all*, 10 = *extremely*). In the current study, this measure was completed in reference to the respondent's motivation to care for his or her spouse (e.g., "How far would you be willing to go to help your spouse?" "How much would you be willing to give to benefit your spouse?"; T1 $\alpha = .64$, T2 $\alpha = .76$).

Perceived partner responsiveness. Perceptions of partner responsiveness to one's needs were assessed with a modified version of the communal-strength measure (e.g., "How far would your spouse be willing to go to help you?"). Items were answered on the same response scale (T1 $\alpha = .82$, T2 $\alpha = .86$).

Results and Discussion

First, we tested effects with a series of multilevel models (using the SAS MIXED procedure) in which intercepts varied randomly across dyads to account for the nested data structure. Indirect effects were formally tested (cf. Baron & Kenny, 1986). Following this, we used a path analysis to test the fit of the entire model.

Correlations of all study variables appear in Table 6.

The predictors, criterion variables, and outcomes for the five models testing the longitudinal projection-promotion cycle are displayed in Table 7. The coefficients are unstandardized, averaged within-dyad slopes. As predicted by the model, own responsiveness predicted perceived partner responsiveness after controlling for partners' responsiveness (Model 1), and the effect of T1 own responsiveness on T2 own responsiveness (temporal stability) was reduced after controlling for T1 perceived partner responsiveness (compare T1 own responsiveness effects in Models 2 and 3). T1 perceived partner responsiveness predicted residualized change in own responsiveness (Model 3). The indirect effect (T1 own responsiveness → T1 perceived partner responsiveness → T2 own responsiveness) was significant (Sobel's $z = 1.97$, $p < .05$), suggesting that the temporal stability of own responsiveness was partially mediated by a combination of T1 projection and longitudinal regulation of responsiveness. In addition, the effect of T1 perceived partner responsiveness on T2 perceived partner responsiveness (temporal stability) was reduced after controlling for T2 own responsiveness (compare T1 perceived partner responsiveness effects in Models 4 and 5). T2 own responsiveness predicted T2 perceived partner responsiveness (Model 5). The indirect effect (T1 perceived partner responsiveness → T2 own responsiveness → T2 perceived partner responsiveness) was significant (Sobel's $z = 1.93$, $p = .05$), suggesting that temporal stability in perceived partner responsiveness was partially indirect, mediated by a combination of longitudinal regulation of responsiveness and T2 projection.

Path analysis, tested with the SAS CALIS procedure, also was performed to test the fit of the entire model. The analyses used the maximum-likelihood method of parameter estimation on the variance–covariance matrix. The tested model and estimated standardized path coefficients are displayed in Figure 5. Wives' and husbands' variances, error terms, and paths were constrained to be equal. An initial model estimated husband–wife covariances among all variables to model dyadic interdependence, but the covariances for T1 own responsiveness, T1 perceived partner responsiveness, and T2 own responsiveness were miniscule and not significant. To simplify results, we dropped these covariances from the model. (Doing so did not meaningfully affect model fit statistics or the estimated parameters.) Path coefficients were consistent with findings from the multilevel models and with our predictions, suggesting that own responsiveness was projected at T1 (effect of T1 own responsiveness on T1 perceptions), that projected perceptions predicted longitudinal changes in own responsiveness (effect of T1 perceptions on T2 own responsiveness), and that changes in own responsiveness were projected (effect of T2 own responsiveness on T2 perceptions). At both time waves, a small kernel of truth in perceptions of responsiveness was also evident (effect of partners' responsiveness on perceptions of responsiveness). This model was an excellent fit to the data (GFI = .94, CFI = 1, non-normed fit index = .99, RMSEA = .02), $\chi^2(23, N = 96) = 24.25$, *ns*. This study replicates the longitudinal projection-promotion cycle findings of Study 3.[7]

Study 5

We view the projection of responsiveness as a dyadic phenomenon. Specifically, those who care for a particular partner's welfare and are motivated to provide support to that partner are thought to project this responsiveness onto the partner, seeing that partner as similarly caring. The projection model does not assume

[7] Perceivers' gender did not significantly moderate any of the effects.

Table 7
Results of Analyses Testing the Projected-Responsiveness/Relationship-Promotion Cycle (Study 4)

	Predicting T1 perceived partner responsiveness	Predicting T2 own responsiveness		Predicting T2 perceived partner responsiveness	
Predictor variable	Model 1	Model 2	Model 3	Model 4	Model 5
T1 partners' responsiveness	.22*	.06	.04	0	−.19
T1 own responsiveness	.94***	.63***	.52***	.17	−.27†
T1 perceived partner responsiveness	—	—	.12*	.40***	.32***
T2 partners' responsiveness	—	—	—	−.01	.24*
T2 own responsiveness	—	—	—	—	.80***

Note. Coefficients are unstandardized coefficients.
† $p < .10$. * $p < .05$. *** $p < .001$.

that perceivers are similarly responsive toward all their relationship partners or that perceivers see similar levels of responsiveness from all of their relationship partners. In addition, the model does not assume that target partners elicit similar levels of responsiveness from all of their partners or that they are perceived as similarly responsive by all of their partners. In Study 5, we examined in three-person groups the extent to which responsiveness and perceived partner responsiveness are due to perceiver factors or target factors, or are specific to relationships.

Moreover, this group study allowed us to include an informant's perceptions of the target partner's responsiveness to the perceiver as an additional index of the target partner's actual responsiveness. Using a hypothetical triad as an example, this means that, when predicting Kerry's perceptions of Andy's communal responsiveness toward her, we controlled for Andy's self-reported responsiveness to Kerry as well as Ed's reports of Andy's responsiveness to Kerry. To the extent that outside observers are less biased (or at least differentially biased) than the target person in reporting on the target person's responsiveness to the perceiver, this allows for a more comprehensive assessment of the accuracy of perceivers' perceptions and for a more stringent estimation of the projection effect. (Kerry's own responsiveness to Andy must uniquely bias her perceptions of Andy's responsiveness to her after removing variance shared with Andy's self-reported responsiveness to Kerry and Ed's perceptions of Andy's responsiveness to Kerry.) Although the partner's self-reported responsiveness and an outsider's view of that partner's responsiveness are each imperfect accuracy benchmarks, together they may present a closer approximation of the partner's true communal responsiveness than would studies of accuracy and projection bias that use only one of these information sources (see also Murray, Holmes, Dolderman, & Griffin, 2000).

In addition, we tested effects of projection of responsiveness on a variety of indices of relationship promotion, including support provision, self-disclosure, and evaluation of the partner. Through the projection process, those who care for partners may develop the motivation and trust necessary to provide support, disclose personal aspects of themselves, and see virtues in the partner (Path C in Figure 1). Moreover, we tested whether the two behavioral forms of perceivers' relationship promotion (support provision and self-disclosure) were detected by partners.

Method

Participants and Procedure

Initial participants were recruited via advertisements posted on Internet bulletin boards for participation in an electronic survey in exchange for a payment of $10. To reduce error variance associated with age, we indicated that only individuals between the ages of 18 and 30 years were eligible for participation. Those who expressed interest in the study were asked to recruit two other individuals for participation who were between the ages of 18 and 30 years, who knew each other, who did not share a biological or romantic relationship with the initial participant or with each other, and at least one of whom was a close friend of the initial participant. (They were instructed that the remaining participant could also be a close friend but that this was not necessary.) Groups in which one or more of the three members failed to complete the questionnaire did not meet the study criteria, and given that the planned analyses required data from all three group members, their data were not included in analyses. Fifty-three triads completed the questionnaire, but data from two triads and two observations in a third triad were necessarily eliminated from analyses because of missing data on the measures of primary interest, resulting in 304 usable observations in which a perceiver rated the responsiveness of a target and in which data for relevant control variables were available (as described in the *Analysis Strategy* section below). The 153 participants included 51 men and 102 women, with an average age of 24.63 years. Relationships were predominately described as friendships (73.5%), with most of the remaining participants described as coworkers, classmates, or roommates.[8] Participants were instructed to refrain from discussing the study or sharing their answers with the other participants while data collection was in progress.

Measures

Own responsiveness. Participants completed two measures of their own communal responsiveness to each of the other triad members. The first was a 10-item measure adapted from Mills et al. (2004; i.e., "I care for this person's needs," "I would sacrifice very much to help this person," "I can easily put this person's needs out of my thoughts," "I would incur a large cost in order to help this person," "I could easily accept not helping this person," "I would go out of my way to help this person," "I would be reluctant to sacrifice for this person," "I care about this person's

[8] A few of the initial participants recruited relationship partners who did not fit the study criteria. Eleven participants were over 30 years of age, and four relationships were described as family or romantic. Because the analyses produced identical results regardless of whether data on these participants were included, we retained their data in the analyses.

This document is copyrighted by the American Psychological Association or one of its allied publishers.
This article is intended solely for the personal use of the individual user and is not to be disseminated broadly.

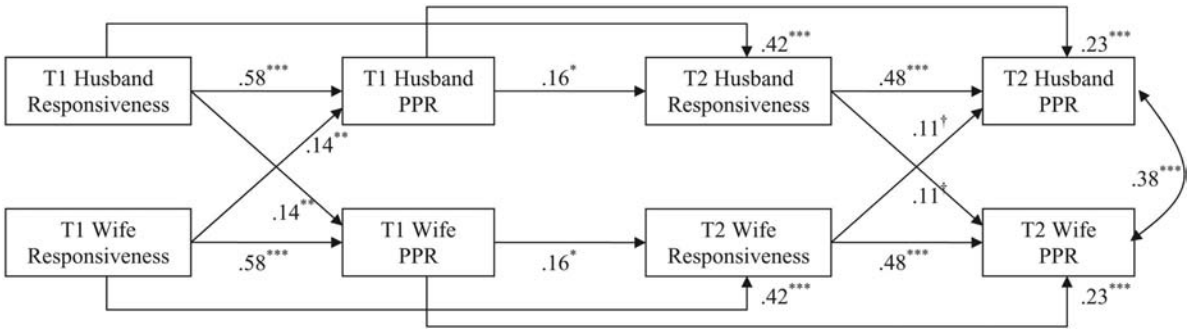

Figure 5. Results of path analysis (Study 4). $^{\dagger}p < .10$. $^{*}p < .05$. $^{**}p < .01$. $^{***}p < .001$. PPR = perceived partner responsiveness.

This document is copyrighted by the American Psychological Association or one of its allied publishers.
This article is intended solely for the personal use of the individual user and is not to be disseminated broadly.

well-being," "Helping this person is a high priority for me," "I care about this person") completed on a 9-point response scale (1 = *strongly disagree*, 9 = *strongly agree*). Negatively worded items were reverse scored (α = .92). The second was a three-item measure (i.e., "How motivated are you to attend to this person's needs?" "How motivated are you to provide emotional support to this person when he/she is stressed?" "How motivated are you to help this person out [e.g., do favors for him/her]?") completed on a 5-point response scale (1 = *not at all motivated*, 5 = *extremely motivated*; α = .96). Scores on these two measures were highly correlated (r = .84).

Perceived partner responsiveness. Two analogous measures assessed perceptions of each partner's responsiveness to the self (e.g., "This person cares for my needs," "How motivated is this person to attend to your needs?") and were completed on identical response scales (10-item measure α = .91; 3-item measure α = .94) Scores on these measures were highly correlated (r = .83).

Informant perceptions of partner responsiveness. Participants indicated the responsiveness of each group member to the other member on two analogous measures (e.g., "A cares for B's needs," "How motivated is A to attend to B's needs?") using identical response scales (10-item measure α = .92; 3-item measure α = .95.) Scores on the two measures were highly correlated (r = .82).

Support provision. Participants indicated the frequency with which they enacted 11 supportive behaviors toward each member in the past 30 days. The behaviors were the 11 that correlated highest with the total score during development of the Inventory of Socially Supportive Behaviors (Barrera, Sandler, & Ramsay, 1981): "Gave him/her some information to help him/her understand a situation he/she was in," "Told him/her that he/she was OK just the way he/she is," "Agreed that what he/she wanted to do was right," "Listened to him/her talk about his/her private feelings," "Said things that made his/her situation clearer and easier to understand," "Told him/her that you feel very close to him/her," "Told him/her that you would keep the things that you talk about private—just between the two you," "Checked back with him/her to see if he/she followed the advice you gave," "Gave him/her feedback on how he/she was doing without saying it was good or bad," "Joked and kidded to try to cheer him/her up." Items were completed on a 5-point response scale (1 = *not at all*, 5 = *about every day*; α = .97).

Partners' perceptions of support provision. Participants completed an analogous measure to indicate their perceptions of each member's provision of support to the self using the same 5-point response scale (α = .97).

Interaction frequency. Using the same 5-point response scale, participants completed a single-item measure of the frequency with which they interacted with each of the group members in the last 30 days (i.e., "How often have you communicated [either in person, on the phone, or over e-mail] with this person in the past 30 days?"). This was used as a control variable in analyses of support provision because the support provision scores are partially confounded with interaction frequency.

Self-disclosure. Participants completed the Self-Disclosure Index (Miller, Berg, & Archer, 1983) to indicate the extent to which they disclosed 10 aspects of themselves to each of their group members ("my personal habits," "things I have done which I feel guilty about," "things I wouldn't do in public," "my deepest feelings," "what I like and dislike about myself," "what is important to me in life," "what makes me the person I am," "my worst fears," "things I have done which I am proud of," "my close relationships with other people"). Items were completed on a 5-point response scale (1 = *not at all*, 5 = *discussed fully and completely*; α = .96).

Partners' perceptions of self-disclosure. Participants completed a measure (analogous to the measure of self-disclosure) of their perceptions of each member's disclosure to the self using the same 5-point response scale (α = .97).

Evaluation of partner. Participants indicated the extent to which five positive social attributes (i.e., *witty and humorous, open and disclosing, sociable and extroverted, socially competent,* and *good leader*) described each group member on a 9-point response scale (1 = *not at all characteristic*, 9 = *completely characteristic*; α = .82).

Results and Discussion

Analysis Strategy

We used a series of cross-classified multilevel models to test hypotheses. We used different models to test hypotheses regarding variance partitioning, projection of responsiveness, and consequences of projection.

Strategy for variance partitioning. We used the Social Relations Model (SRM; Kenny, 1994) to test hypotheses regarding the sources of variability in own responsiveness and perceived partner responsiveness. In the SRM, perceiver variance represents tendencies for participants to view multiple targets in a similar manner. Target variance represents tendencies for participants to be viewed by multiple perceivers in a similar manner. These effects refer to

This document is copyrighted by the American Psychological Association or one of its allied publishers.
This article is intended solely for the personal use of the individual user and is not to be disseminated broadly.

persons perceiving and being perceived by multiple others in consistent ways, respectively. The SRM also estimates *dyadic reciprocity*, a correlation of perceptions within dyads. This effect can also be thought of as *dyad-level variance:* tendencies for relationship means (as averaged across two partners) to vary across dyads. The SRM can also estimate variance due to group. The remaining variance in the data after removing these effects can be interpreted as *variance indicative of idiosyncratic perceptions:* variance in perceptions that cannot be accounted for by perceivers' tendencies to see others in consistent ways, by tendencies for targets to be seen by others in consistent ways, by group-level phenomena, or by the target's reciprocated perceptions of the perceiver. This remaining variance also includes variance due to measurement error, and multiple measurements of the same perception must be used to distinguish the two.

The projection-of-responsiveness model posits a specific patterning of variance in own responsiveness and perceived partner responsiveness. The projection process is presumed to be a relationship-specific phenomenon; people have varying levels of responsiveness to particular partners and (because of projection) perceive varying levels of responsiveness from those partners. Sometimes partners come to reciprocate one's own level of responsiveness. (This might happen often because of a number of processes, such as the kernel of truth in partner's perceptions and their reacting to that perceived kernel of truth by regulating their own responsiveness.) In those cases, projection of responsiveness would yield judgments of partner responsiveness that are correlated across partners. In other cases, the partners do not reciprocate responsiveness. In these cases, projection of responsiveness would yield judgments that are uncorrelated across partners. Thus, for both own responsiveness and perceived partner responsiveness, we predicted substantial dyad variance (in the case of reciprocated responsiveness and perceptions thereof) and idiosyncratic perception variance (in the case of lack of reciprocation).

The projection model does not predict variance due to perceiver (such as tendencies to care about all partners, to perceive all partners as caring for the self, or to complete similar measures in a similar manner) or target (such as tendencies for all people to perceive a target person as caring, perhaps because of that person's personality). Likewise, the projection model does not specifically posit that perceived partner responsiveness is primarily a group-level phenomenon. Thus, we expected more dyadic and idiosyncratic variability than perceiver, target, and group variability.

A series of unconditional (intercept-only) cross-classified multilevel models, tested with SAS PROC MIXED (adapted from recommendations by Kenny, 2006), decomposed the variance of own responsiveness and perceived partner responsiveness into these various components. In these analyses, the two measures of the outcome variable (own responsiveness or perceived partner responsiveness) were standardized across the sample and treated as separate indicators (doubling the number of observations). This provided a means of distinguishing idiosyncratic perception variance from variance due to measurement error. Intercepts were modeled as randomly varying across group, perceiver, target, dyad, and idiosyncratic perception classifications. SAS PROC MIXED discerned whether the variance was greater than zero by producing tests of the significance for these random components. In these variance-decomposition models, no fixed-effect predictors of the outcome variable were modeled.[9]

Strategy to test projection of responsiveness. To continue accounting for the data structure, in subsequent analyses, we added (uncentered) fixed-effect predictors to test projection of responsiveness while modeling intercepts as varying across the classifications described above (cf. Kashy & Kenny, 2000). As discussed previously, two indicators of the partner's actual responsiveness were used, including the target partner's self-reported responsiveness to the perceiver and the third individual's perceptions of the target partner's responsiveness to the perceiver ("informant perceptions"). (To use a hypothetical example, we expected Kerry's own caring for Andy to bias her perceptions of how much Andy cares for her, even after we controlled for Andy's self-reported caring for Kerry and Ed's reports of how much Andy cares for Kerry.) Thus, perceived partner responsiveness was regressed on own responsiveness (projection; Path A in Figure 1), partners' self-reported responsiveness (an index of accuracy; Path B in Figure 1), and informants' perceptions (another index of accuracy; Path B in Figure 1). In addition to examining the strength of fixed effects, we also examined the extent to which the fixed-effect model accounts for variances identified in the unconditional model.

Strategy to test consequences of projection. We used a variation of this modeling strategy to test hypotheses regarding effects of projection on relationship promotion (support provision, self-disclosure, and partner evaluation). Only one measure of each of these constructs was collected, so these models did not distinguish idiosyncratic perception variance from variance due to measurement error. We averaged standardized scores from the two measures of own responsiveness, perceived partner responsiveness, and informant perceptions to create composite indices, which were used in these analyses.

Initial unconditional (intercept-only) models decomposed variance in promotion variables into group, perceiver, target, dyad, and idiosyncratic perception (including measurement error) components. In a subsequent model, own responsiveness and the two accuracy-control variables (partners' self-reported responsiveness and informant perceptions of partners' responsiveness) were included as fixed effects. The final model included these predictors as well as the fixed effect of perceived partner responsiveness (Path C in Figure 1). The projection model posits that, independent of accuracy effects, perceivers' own communal responsiveness to target partners will predict indices of relationship promotion. This effect should be rendered insignificant (in the case of full mediation) or substantially reduced (in the case of partial mediation) once perceivers' perception of the target partner's responsiveness is included as an additional predictor. The significances of the indirect effects were also formally tested (Baron & Kenny, 1986). Given that

[9] SRM analyses of three-person groups require that one of the components of the model is not estimated. The particular analysis strategy used in the current research does not estimate the correlation between perceiver and target effects (e.g., tendencies for those who perceive others in general as responsive to be perceived by others in general as responsive). As it turns out, this is not a serious limitation to the current analysis strategy because of the nearly nonexistent target-variance components for most measures (especially perceived partner responsiveness). The SAS PROC MIXED approach to testing the SRM produces parameter estimates that are nearly identical to those produced by other procedures for testing the SRM (Kenny, 2006; see also Snijders & Kenny, 1999).

the responses to the social-support measure were partly determined by recent interaction frequency, analyses of social-support provision included recent interaction frequency as an additional fixed effect (e.g., a perceiver may provide support on 100% of interactions but only provide support on 1 day because he or she interacted with the target on only 1 day). Finally, we tested whether perceivers' relationship promotion would be detected by partners by examining effects of perceivers' self-reported support provision and self-disclosure on partners' perceptions, controlling for all of the other variables described above.

Correlations

A correlation matrix of all variables appears in Table 8.

Variance Partitioning

SRM variance components are displayed in Table 9. As expected, the two relationship-specific variance components (*idiosyncratic* and *dyad*) of own responsiveness and perceptions of partner responsiveness were significant and outweighed group, perceiver, and target variance. Approximately two thirds of the total variance (and approximately 86% of the variance not due to measurement error) was explained by dyad and idiosyncratic perception effects. These results are consistent with our expectations that communal responsiveness and perceived partner responsiveness are largely relationship-specific; people reported varying levels of responsiveness toward their relationship partners, and they perceived varying levels of responsiveness from their relationship partners. The significant dyad variance suggests that own responsiveness and perceived partner responsiveness toward particular partners are, in part, dyadic phenomena in which the two partners' scores are correlated (i.e., dyadic reciprocity). Whereas dyadic reciprocity has been documented in regard to attraction (Kenny, 1994), to our knowledge, these are the first data providing empirical evidence that felt communal responsiveness and perceptions of partner responsiveness exhibit dyadic reciprocity. Such findings provide support for the idea that most adult relationships are characterized by some degree of mutuality in level of responsiveness and perceptions of partner responsiveness (Clark & Mills, 1993). However, the significant idiosyncratic perception variance also suggests a significant degree of within-relationship independence in responsiveness across partners (21–26% of the total explainable variance). That is, the two partners' reports of communal responsiveness and perceived partner responsiveness varied significantly within relationships.

Variance components for measures of support provision and disclosure suggest a similar pattern. Across these variables, the relationship-specific variance components (dyad and idiosyncratic perception) tended to be greater than the perceiver, target, and group variance components. Unlike the other variables, both perceiver and target variances in partner evaluation also were significant, suggesting some tendency for participants to evaluate the two targets in a similar way and for participants to be evaluated by the two perceivers in a similar way. This pattern of greater perceiver and target variances in trait perception than in more affect-laden perceptions (i.e., responsiveness) is consistent with other findings (Kenny, 1994).

The variance components for informants' perceptions revealed no idiosyncratic variance and a large amount of dyad variance, suggesting that participants viewed the relationship between the two other participants as mutual (i.e., again, using our hypothetical example, Ed's perceptions of Andy's responsiveness to Kerry were strongly correlated with Ed's perceptions of Kerry's responsiveness to Andy). A tendency for people to view others' relationships as mutual has been reported previously in regard to liking (Frey & Smith, 1993; Kenny, Bond, Mohr, & Horn, 1996). The current research suggests a similar tendency to perceive mutual responsiveness in others' relationships.

Projection of Responsiveness

Next we regressed perceptions of partner responsiveness on own responsiveness (projection), target partners' self-reported responsiveness (an index of accuracy), and informants' perceptions of target partners' responsiveness to perceivers (another index of accuracy). Both target partners' self-reported responsiveness to perceivers and informants' perceptions of target partners' responsiveness to perceivers predicted perceivers' perceptions ($b = .11$, $p < .001$ and $b = .12$, $p < .001$, respectively), suggesting some accuracy in perceptions of responsiveness. Suggesting projection of responsiveness, perceivers' own responsiveness to targets was a significant predictor of

Table 8
Correlation Matrix of Variables (Study 5)

Variable	1	2	3	4	5	6	7	8
1. Own responsiveness	**.60*****	.87***	.28***	.54***	.64***	.38***	.54***	.58***
2. Perceived partner responsiveness	.60***	**.62*****	.32***	.55***	.66***	.44***	.60***	.60***
3. Perceived partner responsiveness to third person	.13*	.18**	**.08**	.11†	.13*	.31***	.17**	.12*
4. Support provision	.42***	.44***	.08	**.71*****	.73***	.29***	.90***	.76***
5. Self-disclosure	.47***	.45***	.06	.57***	**.62*****	.37***	.73***	.87***
6. Evaluation of partner	.27***	.30***	.13*	.22**	.27***	**.36*****	.36***	.34***
7. Perceived partner support provision	.40***	.40***	.06	.70***	.49***	.15*	**.64*****	.70***
8. Perceived partner disclosure	.49***	.48***	.10†	.59***	.69***	.24***	.57***	**.69*****

Note. Values on the diagonal (which is indicated by boldface values) are pairwise intraclass correlations, which are the correlations of the two partners' reports. Values above the diagonal are bivariate intrapersonal intraclass correlations, reflecting the association of two variables measured on the same partner. Values below the diagonal are bivariate interpersonal intraclass correlations, reflecting the association of two variables measured on different partners. All correlations were computed using the double-entry method (cf. Griffin & Gonzalez, 1995; Kenny, Kashy, & Cook, 2006).
† $p < .10$. * $p < .05$. ** $p < .01$. *** $p < .001$.

This document is copyrighted by the American Psychological Association or one of its allied publishers.
This article is intended solely for the personal use of the individual user and is not to be disseminated broadly.

Table 9
Variance Decomposition of Variables (Study 5)

Variable	Group	Perceiver	Target	Dyad	Idiosyncratic[a]
Own responsiveness	0 (0)	.12** (.12)	0 (0)	.54*** (.55)	.18*** (.18)
Perceived partner responsiveness	.06 (.06)	.05 (.05)	0 (0)	.51*** (.51)	.22*** (.22)
Informant perceptions of responsiveness	.07 (.07)	.01 (.01)	.03 (.03)	.72*** (.72)	0 (0)
Support provision	.37** (.27)	.16** (.12)	0 (0)	.57*** (.42)	.27*** (.19)
Self-disclosure	.24* (.19)	.25*** (.20)	0 (0)	.55*** (.43)	.24*** (.19)
Evaluation of partner	.72** (.28)	.47*** (.18)	.71*** (.27)	.21* (.08)	.46*** (.18)
Perceived partner support provision	.35** (.28)	.23*** (.18)	0 (0)	.46*** (.36)	.24*** (.19)
Perceived partner self-disclosure	.31** (.24)	.14** (.11)	0 (0)	.56*** (.44)	.28*** (.22)

Note. Values in parentheses are proportions of total variance.
[a] For models decomposing variance of own responsiveness, perceived partner responsiveness, and informant perceptions, idiosyncratic variance is independent of measurement error. Error variances of own responsiveness, perceived partner responsiveness, and informant perceptions were .16 (.16), .17 (.17), and .17 (.17), respectively (*ps* $< .001$).
* $p < .05$. ** $p < .01$. *** $p < .001$.

This document is copyrighted by the American Psychological Association or one of its allied publishers.
This article is intended solely for the personal use of the individual user and is not to be disseminated broadly.

perceived partner responsiveness while controlling for these accuracy effects ($b = .68$, $p < .001$). The projection effect was notably stronger than the accuracy effects.[10]

Recall that dyad and idiosyncratic perception were the two significant variance components for perceived partner responsiveness (see Table 9). Nearly all (97%) of the dyad variance and much (68%) of idiosyncratic perception variance was eliminated after modeling projection and accuracy. Residual dyad variance (.02) was no longer significant, although residual idiosyncratic perception variance (.07) was still significant ($p < .01$). Thus, the fixed effects, which can largely be attributed to projection effects, largely accounted for why perceptions of partner responsiveness were correlated across partners within relationships (because communal responsiveness was correlated across partners and was projected) and why perceptions of partner responsiveness were, in part, idiosyncratic to specific perceiver–target pairings (because communal responsiveness was, in part, idiosyncratic to specific perceiver–target pairings and was projected).[11]

Relationship Promotion

Table 10 displays results of the analyses predicting indices of perceivers' relationship promotion (support provision, self-disclosure, and evaluation of partner). In Model 1, these variables were regressed on the three predictors of perceived partner responsiveness described previously (perceivers' own communal responsiveness toward targets and the two accuracy indices). In Model 2, perceivers' perception of target partners' responsiveness was included as an additional predictor. We predicted that caring perceivers would be more willing to promote relationships, even after controlling for indices of the partner's responsiveness to them, and that these effects would be, in part, explained by caring perceivers' tendencies to project.

As expected, own communal responsiveness predicted each of the outcome variables in Model 1, and perceived partner responsiveness predicted each of the outcome variables in Model 2. In Model 2, the effect of own responsiveness on evaluation of the partner was insignificant, suggesting full mediation. In addition, effects of own responsiveness on support provision and self-disclosure remained significant but were substantially reduced

[10] Including both target partners' self-reported responsiveness and informants' perceptions in the same analysis may have reduced the accuracy estimate (given that they are both used as an index of accuracy). Thus, additional analyses included an average of these scores as an accuracy-composite index. This analysis revealed the same pattern of greater projection effects ($b = .68$, $p < .001$) than accuracy effects ($b = .24$, $p < .001$).

The lack of significant perceiver and target variance in the initial variance-partitioning analyses helped to rule out the possibility that the relationship between own responsiveness and perceived partner responsiveness was due to perceiver effects (such as shared-method variance or tendencies to see all others as responsive) or target effects (such as having generally responsive partners). To be sure, we also conducted traditional multilevel analyses that controlled for perceiver and target effects through inclusion of fixed effects. Specifically, we conducted three-level models, specifying two target partners as nested within perceivers and the three perceivers as nested within groups. We then regressed perceived target partners' responsiveness on own responsiveness, the two accuracy benchmarks, and two additional variables: perceivers' perceptions of third persons' responsiveness to the self (which controlled for perceiver effects) and third persons' perceptions of target partners' responsiveness to the self (which controlled for target effects). In these models, the projection (own responsiveness) effect was nearly identical to that described in the text ($b = .71$, $p < .001$), as were the effects of partners' self-reported responsiveness ($b = .09$, $p < .001$) and the informants' reports ($b = .09$, $p < .001$). The same was the case when we controlled for perceiver and target effects in regard to own responsiveness. These analyses provide additional evidence that the projection-of-responsiveness effect cannot be explained by factors such as individual differences in propensities to see or be seen by others as responsive to the self or shared source and method variance. We do not present these analyses in detail because they are not optimal. By treating third persons' perceptions of targets' responsiveness as a covariate in one observation and as an outcome in another observation, these analyses test nonrecursive models with a recursive analysis.

[11] To obtain a better sense of the variance of perceived partner responsiveness explained by own responsiveness, we tested another model that included only own responsiveness as a predictor of perceived partner responsiveness. The residual variance components were similar (dyad = .02, idiosyncratic = .04), as were estimates of variance explained (dyad = .95, idiosyncratic = .81). These analyses confirm that own responsiveness explained most of the idiosyncratic and dyad variance in perceived partner responsiveness.

Table 10
Effects of Predictor Variables on Indices of Relationship Promotion as a Function of Controlling for Perceived Partner Responsiveness (Study 5)

Variable	Model 1 Coefficient	Model 1 *t*	Model 2 Coefficient	Model 2 *t*
Support provision				
Perceivers' own responsiveness	.34	6.15***	.20	2.26*
Target partner's self-reported responsiveness	.11	2.35*	.10	2.00*
Informant's perception	.03	0.63	.02	0.31
Interaction frequency	.38	7.98***	.39	8.08***
Perceived partner responsiveness	—	—	.17	2.00*
Self-disclosure				
Perceivers' own responsiveness	.64	13.76***	.34	4.45***
Target partner's reported responsiveness	.11	2.61**	.09	2.18*
Informant's perception	.20	4.54***	.17	3.76***
Perceived partner responsiveness	—	—	.37	4.78***
Evaluation of partner				
Perceivers' own responsiveness	.44	5.37***	.08	.53
Target partner's reported responsiveness	.13	1.48	.09	.98
Informant's perception	−.14	−1.60	−.16	−1.98
Perceived partner responsiveness	—	—	.47	3.07**

* $p < .05$. ** $p < .01$. *** $p < .001$.

after we controlled for perceived partner responsiveness, suggesting partial mediation. Tests of the indirect effects of own communal responsiveness affecting the outcome variable via an effect on perceived partner responsiveness were significant (support provision $z = 1.99$, $p < .05$; self-disclosure $z = 4.67$, $p < .001$; evaluation of partner $z = 3.04$, $p < .01$). These analyses confirm the significance of indirect effects of own responsiveness on relationship promotion via subjective perceptions of partners' responsiveness.

Observable Relationship Promotion?

We expected that perceivers' behavioral relationship promotion would be noticed by partners. To test this idea, we regressed partners' perceptions of perceivers' support provision or self-disclosure on perceivers' self-reported provision or disclosure while controlling for all of the predictors of perceivers' relationship promotion described previously (i.e., perceivers' responsiveness to partners, the two accuracy benchmarks, perceived partner responsiveness, interaction frequency in the model predicting perceived support provision). Perceivers' self-reported support provision predicted partners' perceptions of perceivers' support provision ($b = .32$, $p < .001$), and perceivers' self-reported self-disclosure predicted partners' perceptions of perceivers' disclosure ($b = .41$, $p < .001$). Thus, perceivers' behavioral relationship promotion appeared to have been detected by partners.[12]

Summary

Consistent with expectations that the projection of responsiveness is a relationship-specific phenomenon, results of the current study suggest that own responsiveness and perceived partner responsiveness varied most from one relationship to the next and across specific perceiver–target pairings. In contrast, own and perceived responsiveness did not substantially vary across perceivers, targets, or groups. Such variance is necessary to form arguments about influences of individual differences in tendencies to see others as responsive or about shared-method variance. Moreover, most of the relationship-specific and idiosyncratic variance in perceived partner responsiveness was explained by own responsiveness, suggesting that perceivers projected their own caring for particular partners onto those partners' caring for them. Projection appeared to explain why perceptions of partner responsiveness were idiosyncratic to specific perceiver–target pairings (because own responsiveness was idiosyncratic) and why perceptions of partner responsiveness were somewhat correlated across the two partners within a dyad (because own responsiveness was correlated). This was the case after we controlled for two individuals' (the partner's and the third person's) reports of how much partners really cared for perceivers. Finally, these apparent tendencies to project own responsiveness appeared to guide perceivers' willingness to promote relationships. Those who cared for their partners appeared willing to enact supportive behaviors, disclose aspects of the self, and evaluate the partner positively, in

[12] We tested whether perceivers' gender moderated any of the effects. Gender did not significantly moderate the effect of own responsiveness, partner's responsiveness, or informant's perceptions on perceived partner responsiveness, nor did gender significantly moderate any of the effects of own responsiveness or partner's responsiveness on relationship-promotion outcomes. Gender did significantly moderate the effect of informant's perceptions on support provision ($b = .25$, $p < .05$). Informant's perceptions nonsignificantly predicted increased support provision for female perceivers ($b = .11$, $p = .11$) and decreased support provision for male perceivers ($b = -.14$, $p = .12$). Given that this effect was not predicted and was found in the context of many tests of gender interactions, it may be due to chance.

This document is copyrighted by the American Psychological Association or one of its allied publishers.
This article is intended solely for the personal use of the individual user and is not to be disseminated broadly.

part, because they projected their own high levels of care. In turn, partners appeared to detect perceivers' support provision and self-disclosure.

General Discussion

Most people desire to establish and maintain close, communal bonds, and we can do a number of things to facilitate this goal. We can provide tangible or emotional support to partners when they need it. We can seek intimacy and responsiveness by disclosing private aspects of ourselves and expressing our needs and vulnerabilities. We can construe our partners in a positive light to facilitate our own attraction and conviction, and we can express these perceptions and feelings to show partners that we value them. We can maintain our care over time.

But before we do any of this, we need to develop conviction of another sort. We need to know that we are not needlessly expending our energy and time, foolishly building our hopes, and dangerously feeling attached and revealing vulnerabilities to people who will hurt us (Murray et al., 2006). In short, we need to be confident that partners want what we want. Were it not for some assistance, such confidence may be rather difficult, if not impossible, to come by. Rarely do people behave in ways that unequivocally reveal their communal desires; everyone is selfish and overburdened at times, and there is no guarantee of the durability of previously expressed sentiments. Were it not for some assistance, relationship partners might often arrive at an interdependence stalemate, neither making a move until he or she is sure of the other's intentions.

In this article, we have posited that the projection of responsiveness is one form of "assistance" that might resolve or bypass this dilemma. According to our model, people tend to project their own communal responsiveness onto partners. They egocentrically interpret their own concern for a partner's welfare and motivation to attend to the partner's needs as indicators of the partner's concern and communal motivation. Doing so, we predicted, resolves or bypasses an interdependence stalemate by providing caring perceivers with the conviction they need to promote the communal bond.

Projection of Responsiveness

All five of our studies provide evidence supporting the idea that people egocentrically use their own felt communal responsiveness to a relationship partner to infer the partner's responsiveness to the self. In Study 1, participants who recalled an incident in which they were unresponsive to a partner claimed to be less responsive to the partner's needs (relative to participants who recalled an ordinary experience). Suggesting projection of these beliefs, these participants, in turn, claimed that the partner was less responsive to them. In Study 2, participants who were instructed to be responsive to new acquaintances (relative to participants who were instructed not to be responsive) perceived the acquaintances as enacting more responsive behaviors and as being more attracted to them, independent of acquaintances' self-reported behavior and attraction. In Studies 3–5, participants' felt responsiveness to relationship partners (mostly friends in Studies 3 and 5, spouses in Study 4) predicted perceptions of partners' responsiveness to the self more strongly than did partners' self-reported responsiveness and, in Study 5, outsiders' reports of partners' responsiveness. These findings suggest that people do project their own felt communal care and motivation.

As a whole, this research mitigates several alternative explanations. It could be argued, for instance, that partners do not accurately report on their own responsiveness and that this is why we have found greater evidence for projection than for accuracy. This alternative explanation is mitigated by findings from Study 1, in which partners' reports are not involved. If evidence for projection was due to inaccurate partner reports, then random assignment to conditions designed to affect own felt responsiveness should not have had downstream effects on perceived partner responsiveness. But it did. Moreover, we found evidence of projection in Study 2 with regard to perceptions of a new acquaintance's responsive behavior (a domain in which the acquaintance's self-reports might seem untrustworthy) and with regard to perceptions of the acquaintance's attraction to the self (a domain that is more widely considered within the province of subjective experience). In Study 5, we used two individuals' reports of the target partner's responsiveness, a method that more comprehensively controls for accuracy than does the method employed in most studies of projection bias.

One might argue that shared-method variance explains projection effects. This argument cannot explain effects of experimental manipulations in Studies 1 and 2 and is mitigated in Study 5, in which perceiver variance in perceptions of partners' responsiveness (which is necessary to form arguments about shared-method variance) was nearly nonexistent and in which projection effects were found when we controlled for method variance.

Of course, we are not suggesting that perceptions of partner responsiveness completely lack accuracy. Indeed, the current research does reveal that perceptions do reflect a kernel of truth. Even so, the question of why accuracy is not greater is an important one. The answer, we think, is that in day-to-day life, a partner's responsive behavior can be interpreted in many ways, and responsiveness is not always easy to see. Many forms of responsiveness can be subtle (e.g., making an effort to understand a partner's feelings and nodding, smiling when a partner succeeds on a task) and easily missed. However, other forms of responsiveness may be entirely invisible (cf. Bolger et al., 2000), such as refraining from giving advice when it is clear a partner wants to figure something out him or herself or stifling an impulse to complain. Such forms of responsiveness may never be noted. Finally, when one's own life is going very well, responsiveness may reside primarily in the partner's mind. The partner may be very attentive and aware of one's welfare, but he or she may provide little outward support other than sharing in one's joys, as more overt forms of support are not needed. Even when acts are visible, interpretations regarding their responsiveness can vary. For instance, a gift carefully chosen with the partner's preferences in mind may mistakenly be seen as having been purchased so the giver could use it. A gift selfishly chosen so that the giver can use it may mistakenly be seen as responsive. Without unequivocal behavioral manifestations and when intent is ambiguous, the imagination of a partner's latent responsiveness may be easily guided by one's own feelings and motivations.

Functionally Guiding Relationship Promotion

The current research emphasized what projected responsiveness might "do" for perceivers. In line with research on functional

This document is copyrighted by the American Psychological Association or one of its allied publishers.
This article is intended solely for the personal use of the individual user and is not to be disseminated broadly.

This document is copyrighted by the American Psychological Association or one of its allied publishers.
This article is intended solely for the personal use of the individual user and is not to be disseminated broadly.

interpersonal cognition (e.g., Murray, 1999; Simpson et al., 1995), we expected that projecting responsiveness might help perceivers in their pursuit of interpersonal goals. In particular, projecting own responsiveness might "liberate the heart," quelling self-protective inhibitions so caring perceivers can pursue the desired mutual communal relationship. Much as people see emotions in others that facilitate pursuit of activated goals (Maner et al., 2005), seeing one's own communal motivation in others facilitates acting on that motivation. Projecting responsiveness may be a process through which those who care for partners are able to behave and think in interpersonally salutary ways.

Looking at the results from a different perspective, another thing that projected responsiveness or, more to the point, projected lack of responsiveness might seem to "do" for people is to "protect the heart." It can seem to protect relatively nonresponsive people from investing their own communal responsiveness into a relationship that, from their own perspective, is not characterized by much partner responsiveness. From a broader perspective, even projecting lack of responsiveness might facilitate mutual communal relationships. That is, uncaring perceivers' projection dissuades them from involvement in a relationship with a partner about whom they do not care, freeing their resources to find partners about whom they do care.

The current five studies support this perspective. In Study 1, participants who were manipulated to feel unresponsive to partners evaluated the partners more negatively than did control-condition participants. In Study 2, participants who were manipulated to be responsive to a new acquaintance reported greater liking for the acquaintance, reported desiring to become closer to the acquaintance, and subsequently expressed more warmth toward the acquaintance than did participants who were instructed not to be responsive. In both cases, their reports of responsiveness appeared to be influenced, in part, by projection of their own responsiveness.

In Studies 3–5, relatively enduring responsiveness exhibited indirect associations with relationship-promotion outcomes that also were consistent with our model. In Studies 3 and 5, participants who claimed to care for partners reported that they were willing to express feelings of hurt and sadness and reported prior self-disclosure (responses that would facilitate both intimacy and vulnerability; Reis & Shaver, 1988) and evaluated partners more positively (a response that might both reflect and facilitate dependence; Murray et al., 2006) in part, our data suggest, because they projected their care. In Study 5, participants who claimed to care for partners also claimed to have provided more support in the past—a response that contributes to the communal nature of the relationship—in part, our data suggest, because they projected their care.

The very maintenance of communal care may rest, in part, on tendencies to project it. People may not continue to care for a partner unless they see their care reflected back to them, and projection may be one source of perceived mutuality. Studies 3 and 4 supported this idea. Participants who cared for partners appeared to see their partners as caring through projection, and these projected perceptions predicted continued caring. Indeed, the temporal stability of own responsiveness was partially mediated by perceptions of partners' responsiveness. This suggests that, rather than being entirely intrinsically stable, own responsiveness is partially maintained through the confluence of two processes: a tendency to project that responsiveness onto partners and a tendency to regulate one's own responsiveness in accordance with projected perceptions.

We view these responses to projected responsiveness as functional because they increase the probability of achieving the desired mutual communal bond. Disclosing aspects of the self to a partner may enhance the intimate nature of the relationship and elicit responsiveness from the partner more than would refraining from self-disclosure. Evaluating a partner positively may cause that partner to feel positively regarded and facilitate one's own approach and investment. Providing support undoubtedly causes the partner to feel supported more than does withholding support and certainly more than does responding with behaviors that exacerbate a partner's distress. Desiring a close relationship may motivate expressions of attraction more than would desiring to maintain distance.

Of course, many of these responses might not be detected by partners because partners are biased perceivers, too. However, the process that we have described may maximize the probability of a partner detecting responsiveness despite the possibility of many misses. That is, those who project their care may glean the confidence necessary to promote the relationship and consequently emit many signs of their own communal desires. Although many of these signs might be missed by partners, some will be detected. Indeed, in Study 2, projection of responsiveness appeared to motivate behavioral warmth that was evident to outside observers. In Studies 3 and 4, projected perceptions of partner responsiveness predicted maintenance of own responsiveness, and the partner's perceptions of that responsiveness contained some truth. In Study 5, the self-disclosure and support-seeking outcomes were detected by partners. Projection-guided responses may communicate one's communal desires to partners, which may quell their own self-protection concerns and provide an incentive for them to establish the relationship that the perceiver desires (see also Wieselquist et al., 1999).

That said, not all of the functions of projecting responsiveness may require partner detection. Perceiving that we belong in mutually caring relationships facilitates healthy psychological functioning (Baumeister & Leary, 1995). People may benefit from a subjectively construed safety net, the fragility of which is never fully tested. Moreover, projected perceptions of responsiveness may facilitate relationship satisfaction, independent of partners' responsiveness (Lemay et al., 2007). The relationship-promotion outcomes emphasized in the current research also may facilitate perceivers' well-being in the absence of partner detection. For instance, evaluating a partner positively is thought to contribute to one's own relationship satisfaction, ease one's own insecurities, and enhance one's self-perceived desirability as a relationship partner (Murray et al., 1996a; Murray, Holmes, Griffin, Bellavia, & Rose, 2001). Likewise, providing support to a partner may benefit the provider by causing him or her to believe that he or she is a caring person (Clark & Grote, 1998), and providing help to partners with whom a communal relationship is expected enhances providers' mood (Williamson & Clark, 1989, 1992; Williamson, Clark, Pegalis, & Behan, 1996). Thus, just by perceiving a partner to be communally responsive, a person may feel better after helping that person even absent any change in responsiveness on the partner's part. Support that a partner does not detect may also nevertheless benefit the partner (Bolger et al., 2000) and, in turn, the relationship.

Is the Projection of Responsiveness Ever Dysfunctional?

That we have emphasized the positive functions of projecting high levels of communal responsiveness should not imply that our position is that it is always functional. Of course, projection of one's own high responsiveness and one's own low responsiveness sometimes can be dysfunctional.

Potential dysfunctional consequences of projecting high responsiveness. Perceivers' projection-guided attempts to establish a communal relationship might not be successful if partners adamantly do not want that relationship. Although perceivers' desire to establish a communal relationship is an incentive for partners, other qualities of perceivers (e.g., interests, values, personality, and attractiveness) might deter partners in some cases (Baumeister et al., 1993). If perceivers' and partners' desires are substantially discrepant and partners are not willing to budge, perceivers might initially project, invest their time, and raise their hopes, only to realize later that this was all in vain. Whereas initial projections of responsiveness might be pleasant (i.e., imagining the relationship as mutually communal likely has short-term benefits), the discovery of the partner's true sentiments may often be devastating, and prior projection-guided attempts to promote the relationship may only exacerbate one's distress (cf. Murray et al., 2006). Along the way, a potential partner who initially felt neutral toward a perceiver or an actual partner who initially had weak communal ties with a perceiver might also come to feel annoyed and actively avoid the perceiver who, projecting his or her own responsiveness, unwisely tries to establish or strengthen a communal relationship.

Indeed, the process of unreciprocated love tells a tale of projection. In work by Baumeister et al. (1993), relative to rejecters, would-be lovers more frequently reported that rejecters initially reciprocated their desires for romance and that rejecters led them on, whereas rejecters more frequently reported that they explicitly communicated their rejection and that would-be lovers engaged in denial and self-deception (Baumeister et al., 1993). These discrepancies may be explained by would-be lovers' projection of their own feelings. Rejecters also claimed that would-be lovers continued to pursue the relationship long after they should have. Would-be lovers' confidence in making such pursuits may have been fueled by their projection. Finally, would-be lovers reported having more positive and warm feelings than did rejecters, perhaps during the phase in which they projected, but claimed that the event damaged their self-esteem, perhaps after projection gave way to the realization of rejection.

Similarly, projection of responsiveness may be one reason why caring perceivers remain involved in relationships that are detrimental to their well-being. For instance, many victims of domestic abuse construe such abuse as signs of love or attribute partners' abuse to reasons other than a lack of communal concern (Lloyd & Emery, 2000). In the short term, such projections may maintain a sense of relational security and promote behaviors that might enhance the communal nature of the relationship and hence could be considered functional. If such abuse persists, projection of responsiveness might hold people in a relationship that is detrimental to well-being. As both of these examples suggest, whether projection of responsiveness is dysfunctional might depend on whether one emphasizes short-term or long-term consequences and whether projection-guided attempts to promote a communal relationship effectively persuade targets.

Potential dysfunctional consequences of projecting low responsiveness. Projection of one's own lack of responsiveness might also sometimes be dysfunctional. Although we have emphasized caring perceivers' tendencies to project their own care, our findings also imply uncaring perceivers' tendencies to project their apathy. In terms of developing a mutual communal relationship, projecting lack of responsiveness is probably harmful, as it undermines trust. However, this projection may be beneficial in other ways. People often feel guilty when they do not reciprocate others' communal responsiveness (Baumeister, Stillwell, & Heatherton, 1994; Baumeister et al., 1993). Projecting lack of responsiveness might deflect this guilt. In this case, projection of lack of responsiveness might be functional for the individual but not for the partner nor for the communal relationship. In addition, the success of some relationships, such as exchange relationships or relationships characterized by weak communal responsiveness (i.e., neighbors), might depend on each partner not feeling especially responsive to the other's needs (Reis et al., 2004). For a perceiver who desires that sort of relationship, projecting his or her low level of responsiveness might be functional, as it might resolve behavioral conflict and discomfort that might arise through acknowledging the partner's communal desires.

When and Why Does Projection Occur?

Given the many ways in which projection of responsiveness might be dysfunctional, one might wonder why and when this process exists. We believe this particular bias assists people in judging a partner's responsiveness under conditions of uncertainty and that conditions of uncertainty are common because expressions of responsiveness are often inconsistent, ambiguous, or invisible. However, it is important to note that when partners do consistently and unequivocally express their level of care, projection effects may be weaker and accuracy effects may be stronger than what we have observed. Stronger accuracy and weaker projection also may occur when perceivers are in a deliberative mindset, one in which they are motivated to carefully weigh the evidence rather than quickly jump to conclusions (Gagné & Lydon, 2004), as they often may be when perceivers themselves have not yet developed a sense of their own care and desire.

We further speculate that projection effects may be robust (as reported in this article, as well as in an earlier one; Lemay et al., 2007) because people focus on their judgments of responsiveness and dwell on them most when they are in a deliberative state or when a partner's responsiveness is unexpectedly and surprising low or high—those situations in which we have just noted that the projection effects we have identified may be diminished. It is in day-to-day, noncrisis, mundane interactions with others in which, we suspect, most projection of the sort we have observed occurs. To say that the interactions are common and mundane, however, does not mean they are unimportant. To the contrary, we suspect that they are very important to the formation and strengthening (or lack thereof) of close relationships.

Beyond epistemic functions, this particular bias may be robust because it motivates people to seek relationships with those for whom they are confident they care or would like to care and to avoid relationships with those for whom they are confident they do

This document is copyrighted by the American Psychological Association or one of its allied publishers.
This article is intended solely for the personal use of the individual user and is not to be disseminated broadly.

not care and do not wish to care. Hence, by aligning security with desire, this bias seems to aid in the establishment and maintenance of mutual communal relationships.

References

Abbey, A., Andrews, F. M., & Halman, L. J. (1995). Provision and receipt of social support and disregard: What is their impact on the marital life quality of infertile and fertile couples? *Journal of Personality and Social Psychology, 68,* 455–469.

Altman, I., & Taylor, D. A. (1973). *Social penetration: The development of interpersonal relationships.* New York: Holt, Reinhart & Winston.

Baron, R. M., & Kenny, D. A. (1986). The moderator–mediator variable distinction in social psychological research: Conceptual, strategic, and statistical considerations. *Journal of Personality and Social Psychology, 51,* 1173–1182.

Barrera, M., Sandler, I. N., & Ramsay, T. B. (1981). Preliminary development of a scale of social support: Studies on college students. *American Journal of Community Psychology, 9,* 435–447.

Barry, R. A., Lakey, B., & Orehek, E. (2007). Links among attachment dimensions, affect, the self, and perceived support for broadly generalized attachment styles and specific bonds. *Personality and Social Psychology Bulletin, 33,* 340–353.

Baumeister, R. F., & Leary, M. R. (1995). The need to belong: Desire for interpersonal attachments as a fundamental human motivation. *Psychological Bulletin, 117,* 497–529.

Baumeister, R. F., Stillwell, A. M., & Heatherton, T. F. (1994). Guilt: An interpersonal approach. *Psychological Bulletin, 115,* 243–267.

Baumeister, R. F., Wotman, S. R., & Stillwell, A. M. (1993). Unrequited love: On heartbreak, anger, guilt, scriptlessness, and humiliation. *Journal of Personality and Social Psychology, 64,* 377–394.

Bolger, N., Zuckerman, A., & Kessler, R. C. (2000). Invisible support and adjustment to stress. *Journal of Personality and Social Psychology, 79,* 953–961.

Bruner, J. S. (1957). On perceptual readiness. *Psychological Review, 64,* 123–152.

Campbell, L., & Kashy, D. A. (2002). Estimating actor, partner, and interaction effects for dyadic data using PROC MIXED and HLM: A user-friendly guide. *Personal Relationships, 9,* 327–342.

Clark, M. S., Dubash, P., & Mills, J. (1998). Interest in another's consideration of one's needs in communal and exchange relationships. *Journal of Experimental Social Psychology, 34,* 246–264.

Clark, M. S., & Finkel, E. J. (2005). Willingness to express emotion: The impact of relationship type, communal orientation, and their interaction. *Personal Relationships, 12,* 169–180.

Clark, M. S., Graham, S., & Grote, N. (2002). Bases for giving benefits in marriage: What is ideal? What is realistic? What really happens? In P. Noller & J. A. Feeney (Eds.), *Understanding marriage: Developments in the study of couple interaction* (pp. 150–176). New York: Cambridge University Press.

Clark, M. S., & Grote, N. K. (1998). Why aren't indices of relationship costs always negatively related to indices of relationship quality? *Personality and Social Psychology Review, 2,* 2–17.

Clark, M. S., & Mills, J. (1993). The difference between communal and exchange relationships: What it is and is not. *Personality and Social Psychology Bulletin, 19,* 684–691.

Clark, M. S., & Monin, J. K. (2006). Giving and receiving communal responsiveness as love. In R. J. Sternberg & K. Weis (Eds.), *The new psychology of love* (pp. 200–221). New Haven, CT: Yale University Press.

Clark, M. S., Ouellette, R., Powell, M. C., & Milberg, S. (1987). Recipient's mood, relationship type, and helping. *Journal of Personality and Social Psychology, 53,* 94–103.

Cohen, J., Cohen, P., West, S. G., & Aiken, L. S. (2003). *Applied multiple regression/correlation analysis for the behavioral sciences.* Mahwah, NJ: Erlbaum.

Cohen, S., Sherrod, D. R., & Clark, M. S. (1986). Social skills and the stress-protective role of social support. *Journal of Personality and Social Psychology, 50,* 963–973.

Collins, N. L., & Feeney, B. C. (2000). A safe haven: An attachment theory perspective on support seeking and caregiving in intimate relationships. *Journal of Personality and Social Psychology, 78,* 1053–1073.

Collins, N. L., & Feeney, B. C. (2004). Working models of attachment shape perceptions of social support: Evidence from experimental and observational studies. *Journal of Personality and Social Psychology, 87,* 363–383.

Cook, W. L. (2000). Understanding attachment security in family context. *Journal of Personality and Social Psychology, 78,* 285–294.

Coyne, J. C., Wortman, C. B., & Lehman, D. R. (1988). The other side of support: Emotional overinvolvement and miscarried helping. In B. H. Gottlieb (Ed.), *Marshaling social support: Formats, processes, and effects* (pp. 305–330). Thousand Oaks, CA: Sage.

Cutrona, C. E., Hessling, R. M., & Suhr, J. A. (1997). The influence of husband and wife personality on marital social support interactions. *Personal Relationships, 4,* 379–393.

DePaulo, B. M., Kashy, D. A., Kirkendol, S. E., Wyer, M. M., & Epstein, J. A. (1996). Lying in everyday life. *Journal of Personality and Social Psychology, 70,* 979–995.

Epley, N., Keysar, B., Van Boven, L., & Gilovich, T. (2004). Perspective taking as egocentric anchoring and adjustment. *Journal of Personality and Social Psychology, 87,* 327–339.

Felson, R. B. (1980). Communication barriers and the reflected appraisal process. *Social Psychology Quarterly, 43,* 223–233.

Ferguson, M. J., & Bargh, J. A. (2004). Liking is for doing: The effects of goal pursuit on automatic evaluation. *Journal of Personality and Social Psychology, 87,* 557–572.

Finkel, E. J., & Campbell, W. K. (2001). Self-control and accommodation in close relationships: An interdependence analysis. *Journal of Personality and Social Psychology, 81,* 263–277.

Fiske, S. T. (1992). Thinking is for doing: Portraits of social cognition from daguerreotype to laserphoto. *Journal of Personality and Social Psychology, 63,* 877–889.

Frey, K. P., & Smith, E. R. (1993). Beyond the actor's traits: Forming impressions of actors, targets, and relationships from social behaviors. *Journal of Personality and Social Psychology, 65,* 486–493.

Fritz, M. S., & MacKinnon, D. P. (2007). Required sample size to detect the mediated effect. *Psychological Science, 18,* 233–239.

Gagné, F., & Lydon, J. (2004). Bias and accuracy in close relationships: An integrative review. *Personality and Social Psychology Review, 8,* 322–338.

Gangestad, S. W., Simpson, J. A., DiGeronimo, K., & Biek, M. (1992). Differential accuracy in person perception across traits: Examination of a functional hypothesis. *Journal of Personality and Social Psychology, 62,* 688–698.

Gill, M. J., & Swann, W. B., Jr. (2004). On what it means to know someone: A matter of pragmatics. *Journal of Personality and Social Psychology, 86,* 405–418.

Griffin, D. W., & Gonzalez, R. (1995). Correlational analysis of dyad-level data in the exchangeable case. *Psychological Bulletin, 118,* 430–439.

Holmes, D. S. (1968). Dimensions of projection. *Psychological Bulletin, 69,* 248–268.

Holmes, J. G., & Rempel, J. K. (1989). Trust in close relationships. In C. Hendrick (Ed.), *Close relationships* (pp. 187–220). Thousand Oaks, CA: Sage.

James, W. (1890). *The principles of psychology.* New York: Dover.

Kashy, D. A., & Kenny, D. A. (2000). The analysis of data from dyads and groups. In H. T. Reis & C. M. Judd (Eds.), *Handbook of research methods in social and personality psychology* (pp. 451–477). New York: Cambridge University Press.

Kawada, C. L. K., Oettingen, G., Gollwitzer, P. M., & Bargh, J. A. (2004).

This document is copyrighted by the American Psychological Association or one of its allied publishers.
This article is intended solely for the personal use of the individual user and is not to be disseminated broadly.

The projection of implicit and explicit goals. *Journal of Personality and Social Psychology, 86,* 545–559.

Kenny, D. A. (1994). *Interpersonal perception: A social relations analysis.* New York: Guilford Press.

Kenny, D. A. (2006). *Estimation of the SRM not using specialized software.* Retrieved February 19, 2008, from http://davidakenny.net/doc/srmsoftware.doc

Kenny, D. A., & Acitelli, L. K. (2001). Accuracy and bias in the perception of the partner in a close relationship. *Journal of Personality and Social Psychology, 80,* 439–448.

Kenny, D. A., Bond, C. F., Jr., Mohr, C. D., & Horn, E. M. (1996). Do we know how much people like one another? *Journal of Personality and Social Psychology, 71,* 928–936.

Kenny, D. A., Kashy, D. A., & Cook, W. L. (2006). *Dyadic data analysis.* New York: Guilford Press.

Krueger, J., & Clement, R. W. (1994). The truly false consensus effect: An ineradicable and egocentric bias in social perception. *Journal of Personality and Social Psychology, 67,* 596–610.

Kunda, Z. (1990). The case for motivated reasoning. *Psychological Bulletin, 108,* 480–498.

Lakey, B., & Cassady, P. B. (1990). Cognitive processes in perceived social support. *Journal of Personality and Social Psychology, 59,* 337–343.

Lakey, B., McCabe, K. M., Fisicaro, S. A., & Drew, J. B. (1996). Environmental and personal determinants of support perceptions: Three generalizability studies. *Journal of Personality and Social Psychology, 70,* 1270–1280.

Laurenceau, J.-P., Barrett, L. F., & Pietromonaco, P. R. (1998). Intimacy as an interpersonal process: The importance of self-disclosure, partner disclosure, and perceived partner responsiveness in interpersonal exchanges. *Journal of Personality and Social Psychology, 74,* 1238–1251.

Leary, M. R., Springer, C., Negel, L., Ansell, E., & Evans, K. (1998). The causes, phenomenology, and consequences of hurt feelings. *Journal of Personality and Social Psychology, 74,* 1225–1237.

Lemay, E. P., Jr., Clark, M. S., & Feeney, B. C. (2007). Projection of responsiveness to needs and the construction of satisfying communal relationships. *Journal of Personality and Social Psychology, 92,* 834–853.

Lloyd, S. A., & Emery, B. C. (2000). The context and dynamics of intimate aggression against women. *Journal of Social and Personal Relationships, 17,* 503–521.

Lydon, J. E., Jamieson, D. W., & Holmes, J. G. (1997). The meaning of social interactions in the transition from acquaintanceship to friendship. *Journal of Personality and Social Psychology, 73,* 536–548.

MacKinnon, D. P., Krull, J. L., & Lockwood, C. M. (2000). Equivalence of the mediation, confounding and suppression effect. *Prevention Science, 1,* 173–181.

MacKinnon, D. P., Lockwood, C. M., Hoffman, J. M., West, S. G., & Sheets, V. (2002). A comparison of methods to test mediation and other intervening variable effects. *Psychological Methods, 7,* 83–104.

Maner, J. K., Kenrick, D. T., Becker, D. V., Robertson, T. E., Hofer, B., Neuberg, S. L., et al. (2005). Functional projection: How fundamental social motives can bias interpersonal perception. *Journal of Personality and Social Psychology, 88,* 63–78.

Mikulincer, M., & Nachshon, O. (1991). Attachment styles and patterns of self-disclosure. *Journal of Personality and Social Psychology, 61,* 321–331.

Miller, L. C., Berg, J. H., & Archer, R. L. (1983). Openers: Individuals who elicit intimate self-disclosure. *Journal of Personality and Social Psychology, 44,* 1234–1244.

Mills, J., Clark, M. S., Ford, T. E., & Johnson, M. (2004). Measurement of communal strength. *Personal Relationships, 11,* 213–230.

Murray, S. L. (1999). The quest for conviction: Motivated cognition in romantic relationships. *Psychological Inquiry, 10,* 23–34.

Murray, S. L., Holmes, J. G., Bellavia, G., Griffin, D. W., & Dolderman, D. (2002). Kindred spirits? The benefits of egocentrism in close relationships. *Journal of Personality and Social Psychology, 82,* 563–581.

Murray, S. L., Holmes, J. G., & Collins, N. L. (2006). Optimizing assurance: The risk regulation system in relationships. *Psychological Bulletin, 132,* 641–666.

Murray, S. L., Holmes, J. G., Dolderman, D., & Griffin, D. W. (2000). What the motivated mind sees: Comparing friends' perspectives to married partners' views of each other. *Journal of Experimental Social Psychology, 36,* 600–620.

Murray, S. L., Holmes, J. G., & Griffin, D. W. (1996a). The benefits of positive illusions: Idealization and the construction of satisfaction in close relationships. *Journal of Personality and Social Psychology, 70,* 79–98.

Murray, S. L., Holmes, J. G., & Griffin, D. W. (1996b). The self-fulfilling nature of positive illusions in romantic relationships: Love is not blind, but prescient. *Journal of Personality and Social Psychology, 71,* 1155–1180.

Murray, S. L., Holmes, J. G., & Griffin, D. W. (2000). Self-esteem and the quest for felt security: How perceived regard regulates attachment processes. *Journal of Personality and Social Psychology, 78,* 478–498.

Murray, S. L., Holmes, J. G., Griffin, D. W., Bellavia, G., & Rose, P. (2001). The mismeasure of love: How self-doubt contaminates relationship beliefs. *Personality and Social Psychology Bulletin, 27,* 423–436.

Reis, H. T., Clark, M. S., & Holmes, J. G. (2004). Perceived partner responsiveness as an organizing construct in the study of intimacy and closeness. In D. J. Mashek & A. P. Aron (Eds.), *Handbook of closeness and intimacy* (pp. 201–225). Mahwah, NJ: Erlbaum.

Reis, H. T., & Shaver, P. (1988). Intimacy as an interpersonal process. In S. Duck, D. F. Hay, S. E. Hobfoll, & W. Ickes (Eds.), *Handbook of personal relationships: Theory, research and interventions* (pp. 367–389). Oxford, England: Wiley.

Roskos-Ewoldsen, D. R., & Fazio, R. H. (1992). On the orienting value of attitudes: Attitude accessibility as a determinant of an object's attraction of visual attention. *Journal of Personality and Social Psychology, 63,* 198–211.

Shrout, P. E., & Bolger, N. (2002). Mediation in experimental and nonexperimental studies: New procedures and recommendations. *Psychological Methods, 7,* 422–445.

Simpson, J. A., Ickes, W., & Blackstone, T. (1995). When the head protects the heart: Empathic accuracy in dating relationships. *Journal of Personality and Social Psychology, 69,* 629–641.

Simpson, J. A., Orina, M. M., & Ickes, W. (2003). When accuracy hurts, and when it helps: A test of the empathic accuracy model in marital interactions. *Journal of Personality and Social Psychology, 85,* 881–893.

Simpson, J. A., Rholes, W. S., & Nelligan, J. S. (1992). Support seeking and support giving within couples in an anxiety-provoking situation: The role of attachment styles. *Journal of Personality and Social Psychology, 62,* 434–446.

Smith, C. A., & Ellsworth, P. C. (1985). Patterns of cognitive appraisal in emotion. *Journal of Personality and Social Psychology, 48,* 813–838.

Snijders, T. A. B., & Kenny, D. A. (1999). The social relations model for family data: A multilevel approach. *Personal Relationships, 6,* 471–486.

Tazelaar, M. J. A., Van Lange, P. A. M., & Ouwerkerk, J. W. (2004). How to cope with "noise" in social dilemmas: The benefits of communication. *Journal of Personality and Social Psychology, 87,* 845–859.

Tooby, J., & Cosmides, L. (1996). Friendship and the banker's paradox: Other pathways to the evolution of adaptations for altruism. In W. G. Runciman, J. M. Smith, & R. I. M. Dunbar (Eds.), *Evolution of social behaviour patterns in primates and man* (pp. 119–143). Oxford, England: Oxford University Press.

Van Lange, P. A. M., Rusbult, C. E., Drigotas, S. M., Arriaga, X. B., Witcher, B. S., & Cox, C. L. (1997). Willingness to sacrifice in close relationships. *Journal of Personality and Social Psychology, 72,* 1373–1395.

This document is copyrighted by the American Psychological Association or one of its allied publishers.
This article is intended solely for the personal use of the individual user and is not to be disseminated broadly.

Vinokur, A., Schul, Y., & Caplan, R. D. (1987). Determinants of perceived social support: Interpersonal transactions, personal outlook, and transient affective states. *Journal of Personality and Social Psychology, 53,* 1137–1145.

Wieselquist, J., Rusbult, C. E., Foster, C. A., & Agnew, C. R. (1999). Commitment, pro-relationship behavior, and trust in close relationships. *Journal of Personality and Social Psychology, 77,* 942–966.

Williamson, G. M., & Clark, M. S. (1989). Providing help and desired relationship type as determinants of changes in moods and self-evaluations. *Journal of Personality and Social Psychology, 56,* 722–734.

Williamson, G. M., & Clark, M. S. (1992). Impact of desired relationship type on affective reactions to choosing and being required to help. *Personality and Social Psychology Bulletin, 18,* 10–18.

Williamson, G. M., Clark, M. S., Pegalis, L. J., & Behan, A. (1996). Affective consequences of refusing to help in communal and exchange relationships. *Personality and Social Psychology Bulletin, 22,* 34–47.

Wrosch, C., Scheier, M. F., Miller, G. E., Schulz, R., & Carver, C. S. (2003). Adaptive self-regulation of unattainable goals: Goal disengagement, goal reengagement, and subjective well-being. *Personality and Social Psychology Bulletin, 29,* 1494–1508.

Yovetich, N. A., & Rusbult, C. E. (1994). Accommodative behavior in close relationships: Exploring transformation of motivation. *Journal of Experimental Social Psychology, 30,* 138–164.

Received August 6, 2006
Revision received August 23, 2007
Accepted August 28, 2007 ■

This document is copyrighted by the American Psychological Association or one of its allied publishers.
This article is intended solely for the personal use of the individual user and is not to be disseminated broadly.